Raceway

Metal Raceway

HBL6750 Series Internal Corner Coupling (Plated)

Features

- Concealed fitting for making an internal corner while continuing original run in a straight line.

Ordering Information

Description	Material	UPC Number	Catalog Number
Internal Corner Coupling (Plated)	Galvanized Steel	783585217802	**HBL6717TCAGY**

Color
Gray

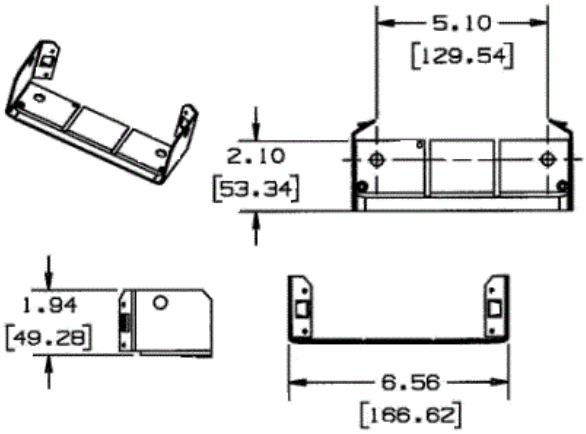

Listings

UL Listed
CSA Certified

Specifications

Height	1.94"
Width	6.56"
Length	1.94"

Online Resources

Customer Use Drawing
eCatalog
Installation Instructions