PASS & SEYMOUR®

1400 Series Industrial Spring-Driven Cable Reel

For the toughest, most demanding industrial environments

1400 SERIES

The 1400 Series Industrial Cable Reels are the professionals' choice for demanding industrial applications where reliability and versatility are paramount. Made in the USA with a minimum of components, these reels are ideal for assembly and fabrication work areas, Class A/C overhead cranes and hoists, schools and theaters, and much more.

- Made in USA
- Steel frame construction, black thermoplastic slip ring cover, yellow powder-coat finish
- NEMA 4 rated enclosure
- UL and CSA Listed

Product Features

- Rugged steel frame construction with safety chain hole for overhead-mounted reels
- Precision-built main spring housed in a safety-sealed canister
- Durable yellow or black powder-coated finish with black thermoplastic slip ring cover
- Operating temperature range of -22°F to 194°F (-30°C to 90°C)
- Adjustable cable guide arm with 12 positions to direct cables to wherever you need them
- Ratchet that locks the spool to keep cable at specific extension and disengages by pulling
- Adjustable ball stop that limits cable retraction and prevents damage to cord end accessories
- Precision slip ring assembly enclosed in NEMA 4 weatherproof, gasketed enclosure with grounded ring
- UL & CSA Listed for indoor & outdoor use to NEMA 4
- Come with one conductor grounded to the reel
- Type SOO-A cable is pre-installed
- One-year warranty

Product Components

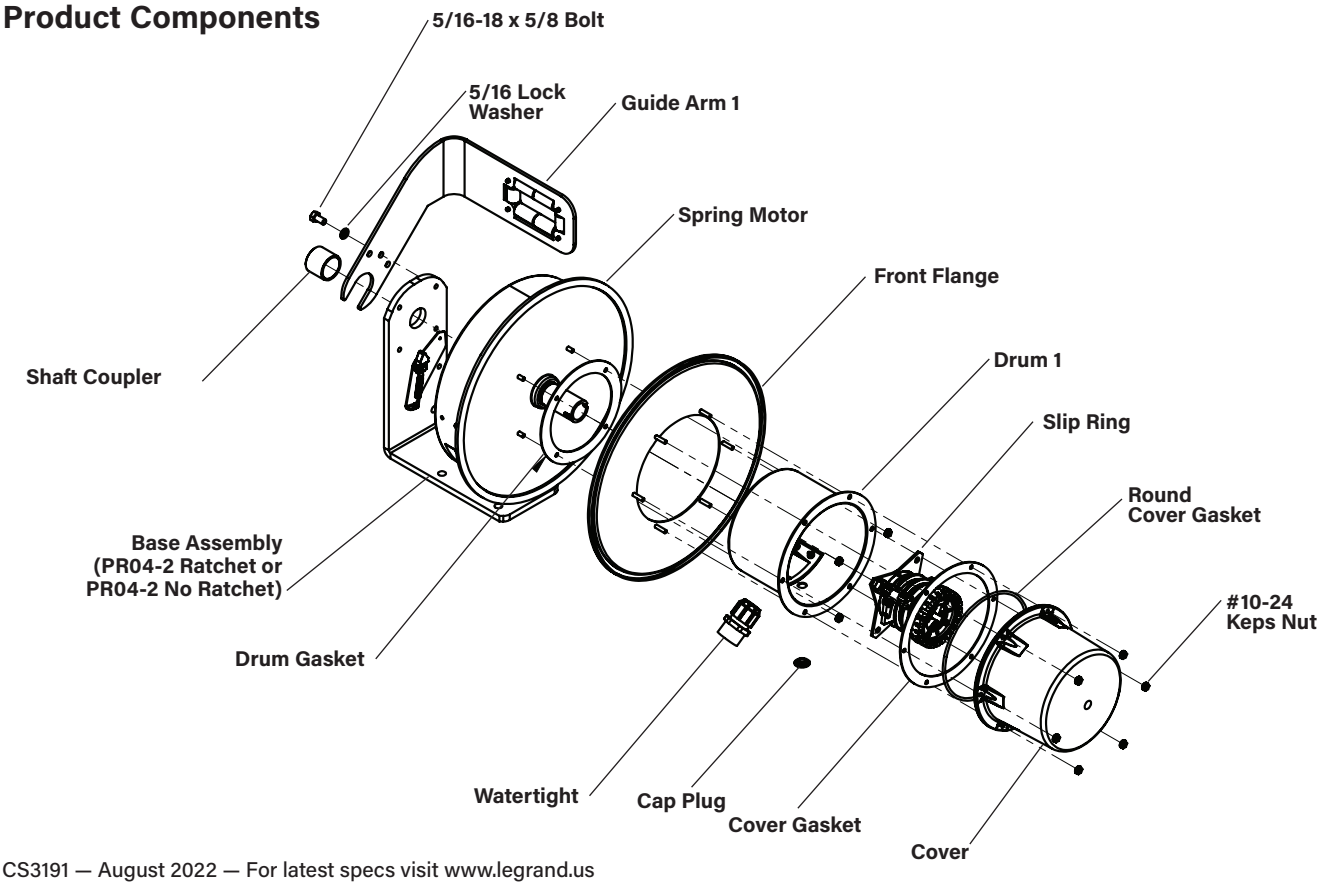

Ordering Information

1400 Series Cable Reel

Legrand Part #	Color	Cable Length	Application	AWG/C	Amperage	End Accessory
CR14L103N50F25	Yellow	50 ft	Lift/Drag	10AWG 3C	25	None
CR14L103N60F25	Yellow	60 ft	Lift/Drag	10AWG 3C	25	None
CR14L103N30F25	Yellow	30 ft	Lift/Drag	10AWG 3C	25	None
CR14L103N30F25B	Black	30 ft	Lift/Drag	10AWG 3C	25	None
CR14L104N30F20	Yellow	30 ft	Lift/Drag	10AWG 4C	20	None
CR14L104N50F20	Yellow	50 ft	Lift/Drag	10AWG 4C	20	None
CR14S104N40F20	Yellow	40 ft	Stretch	10AWG 4C	20	None
CR14L104N40F20	Yellow	40ft	Lift/Drag	10AWG 4C	20	None
CR14R104N60F20	Yellow	60 ft	Retrive	10AWG 4C	20	None
CR14R104N30F20	Yellow	30 ft	Retrive	10AWG 4C	20	None
CR14L104N30F20B	Black	30 ft	Lift/Drag	10AWG 4C	20	None
CR14L104N40F20B	Black	40 ft	Lift/Drag	10AWG 4C	20	None
CR14S123N50F20	Yellow	50 ft	Stretch	12AWG 3C	20	None
CR14L123N30F20	Yellow	30 ft	Lift/Drag	12AWG 3C	20	None
CR14L123N40F20	Yellow	40 ft	Lift/Drag	12AWG 3C	20	None
CR14L123N50F20	Yellow	50 ft	Lift/Drag	12AWG 3C	20	None
CR14S123N50F20B	Black	50 ft	Stretch	12AWG 3C	20	None
CR14L123N30F20B	Black	30 ft	Lift/Drag	12AWG 3C	20	None
CR14L123N40F20B	Black	40 ft	Lift/Drag	12AWG 3C	20	None
CR14L123N50F20B	Black	50 ft	Lift/Drag	12AWG 3C	20	None

Ordering Information

1400 Series Cable Reel

Catalog Number	Color	Cable Length	Application	AWG/C	Amperage	End Accessory
CR14L124N40F16	Yellow	40 ft	Lift/Drag	12AWG 4C	16	None
CR14L124N50F16	Yellow	50 ft	Lift/Drag	12AWG 4C	16	None
CR14L124N30F16	Yellow	30 ft	Lift/Drag	12AWG 4C	16	None
CR14S124N40F16	Yellow	40 ft	Stretch	12AWG 4C	16	None
CR14S124N50F16	Yellow	50 ft	Stretch	12AWG 4C	16	None
CR14S124N30F16	Yellow	30ft	Stretch	12AWG 4C	16	None
CR14L124N20F16	Yellow	20 ft	Lift/Drag	12AWG 4C	16	None
CR14R124N30F16	Yellow	30 ft	Retrieve	12AWG 4C	16	None
CR14L124N40F16B	Black	40 ft	Lift/Drag	12AWG 4C	16	None
CR14L124N50F16B	Black	50 ft	Lift/Drag	12AWG 4C	16	None
CR14L124N30F16B	Black	30 ft	Lift/Drag	12AWG 4C	16	None
CR14S124N40F16B	Black	40 ft	Stretch	12AWG 4C	16	None
CR14L143N30F15	Yellow	30 ft	Lift/Drag	14AWG 3C	15	None
CR14R143N100F15	Yellow	100 ft	Retrieve	14AWG 3C	15	None
CR14L144N40F12	Yellow	40 ft	Lift/Drag	14AWG 4C	12	None
CR14L144N30F12	Yellow	30 ft	Lift/Drag	14AWG 4C	12	None
CR14S144N50F12	Yellow	50 ft	Stretch	14AWG 4C	12	None
CR14S144N30F12	Yellow	30 ft	Stretch	14AWG 4C	12	None
CR14L163N70F10	Yellow	70 ft	Lift/Drag	16AWG 3C	10	None
CR14L163N100F10	Yellow	100 ft	Lift/Drag	16AWG 3C	10	None
CR14L163N70F10B	Black	70 ft	Lift/Drag	16AWG 3C	10	None

Rating and Specifications

1400 Series Standard Reels

Cable Gauge	No. Cond.	Type	Voltage	Current
16 AWG	2	SOW	600	10A
14 AWG	2	SOW	600	15A
12 AWG	2	SOW	600	20A
10 AWG	2	SOW	600	25A
16 AWG	3	SOW	600	10A
14 AWG	3	SOW	600	15A
12 AWG	3	SOW	600	20A
10 AWG	3	SOW	600	25A
16 AWG	4	SOW	600	8A
14 AWG	4	SOW	600	12A
12 AWG	4	SOW	600	16A
10 AWG	4	SOW	600	20A
16 AWG	5	SOW	600	8A
14 AWG	5	SOW	600	12A
12 AWG	5	SOW	600	16A
10 AWG	5	SOW	600	20A

Cable Gauge	No. Cond.	Type	Voltage	Current
16 AWG	6	SOW	600	8A
14 AWG	6	SOW	600	12A
12 AWG	6	SOW	600	16A
10 AWG	6	SOW	600	20A
16 AWG	7	SOW	600	7A
14 AWG	7	SOW	600	10.5A
12 AWG	7	SOW	600	14A
18 AWG	8	SOW	600	4A
16 AWG	8	SOW	600	7A
14 AWG	8	SOW	600	10.5A
12 AWG	8	SOW	600	14A
16 AWG	10	SOW	600	5A
14 AWG	10	SOW	600	7.5A
18 AWG	12	SOW	600	3A
16 AWG	12	SOW	600	5A
14 AWG	12	SOW	600	7.5A

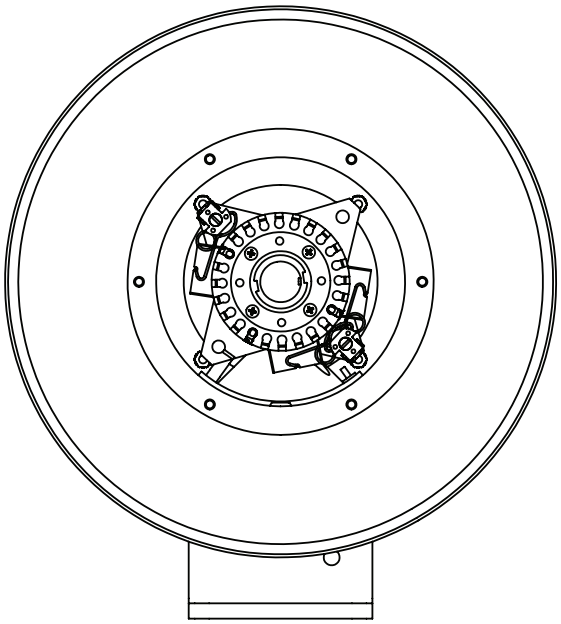

Slip ring orientation
cover removed for clarity

Slip Ring #	Cond. Base Color	Cond. Tracer Color
GRD	Green	–
2	Black	–
3	White	–
4	Red	–
5	Orange	–
6	Blue	–
7	White	Black
8	Red	Black
9	Green	Black
10	Orange	Black
11	Blue	Black
12	Black	White

Spool Cable Jacket Stripping Chart

Cable Conductors	Stripping Length
2	9.00"
3	9.00"
4	9.00"
5	12.00"
6	12.00"
7	12.00"
8	12.00"
10	14.00"
12	14.00"

Dimensional Information

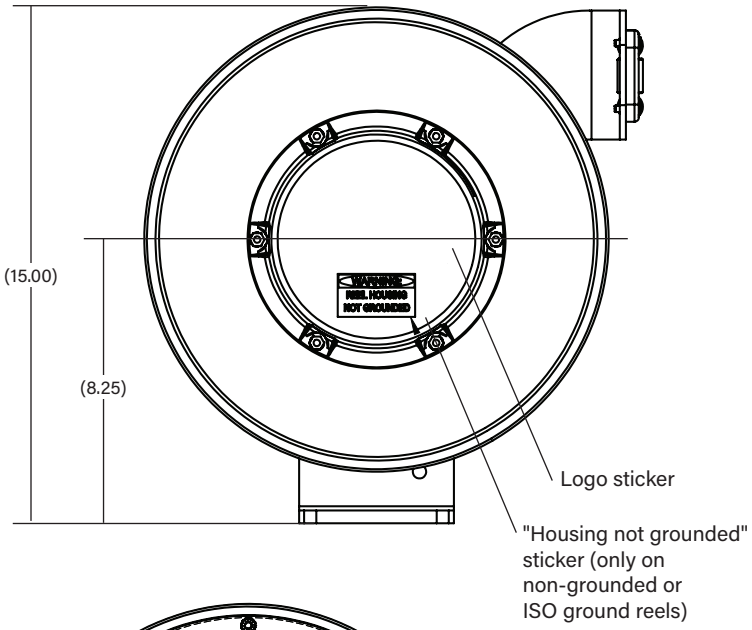

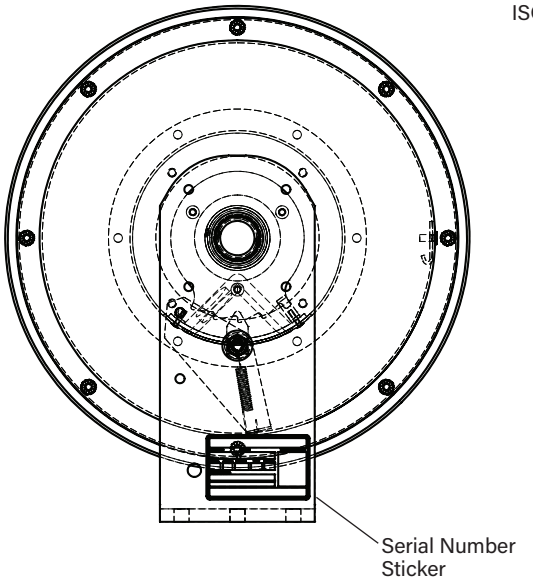

Drum/Ratchet Orientation

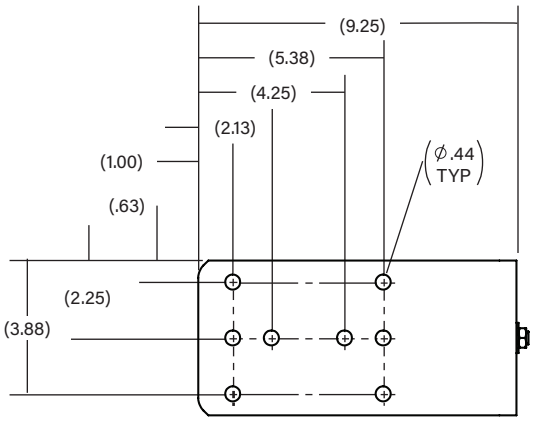

Base Mounting

Dimensional Information

DIM Schedule

Legrand Reel	Description	DIM "A"	DIM "B"	DIM "C"
CR14S144N50F12	REEL PR PBKP1404-50 S CBL	4.57	3.60	13.54
CR14S144N30F12	REEL PR PAK1404-30 S CBL	3.07	5.10	13.54
CR14S124N50F16	REEL PR PBKP1204-50 S CBL	4.57	3.60	13.54
CR14S124N40F16	REEL PR PBJP1204-40 S CBL	4.57	3.60	13.54
CR14S124N30F16	REEL PR PAJ1204-30 S CBL	3.07	5.10	13.54
CR14S123N50F20	REEL PR PBKP1203-50 S CBL	4.57	3.60	13.54
CR14S104N40F20	REEL PR PBJP1004-40 S CBL	4.57	3.60	13.54
CR14R143N100F15	REEL PR PCKS1403-100 R CBL	6.07	3.60	15.04
CR14R124N30F16	REEL PR PAK1204-30 R CBL	3.07	5.10	13.54
CR14R104N60F20	REEL PR PCJS1004-60 R CBL	6.07	2.60	14.04
CR14R104N30F20	REEL PR PAJ1004-30 R CBL	3.07	5.10	13.54
CR14L163N70F10	REEL PR PAKS1603-70 L/D CBL	3.07	5.10	13.54
CR14L163N100F10	REEL PR PBKS1603-100 L/D CBL	4.57	3.60	13.54
CR14L144N40F12	REEL PR PAK1404-40 L/D CBL	3.07	5.10	13.54
CR14L144N30F12	REEL PR PAK1404-30 L/D CBL	3.07	5.10	13.54
CR14L143N30F15	REEL PR PAK1403-30 L/D CBL	3.07	5.10	13.54
CR14L124N50F16	REEL PR PBKP1204-50 L/D CBL	4.57	3.60	13.54
CR14L124N40F16	REEL PR PBKP1204-40 L/D CBL	4.57	3.60	13.54
CR14L124N30F16	REEL PR PAK1204-30 L/D CBL	3.07	5.10	13.54
CR14L124N20F16	REEL PR PAK1204-20 L/D CBL	3.07	5.10	13.54
CR14L123N50F20	REEL PR PBJS1203-50 L/D CBL	4.57	3.60	13.54
CR14L123N40F20	REEL PR PBK1203-40 L/D CBL	4.57	3.60	13.54
CR14L123N30F20	REEL PR PAK1203-30 L/D CBL	3.07	5.10	13.54
CR14L104N50F20	REEL PR PCKP1004-50 L/D CBL	6.07	3.60	15.04
CR14L104N40F20	REEL PR PBKP1004-40 L/D CBL	4.57	3.60	13.54
CR14L104N30F20	REEL PR PAJ1004-30 L/D CBL	3.07	5.10	13.54
CR14L103N50F25	REEL PR PBKP1003-50 L/D CBL	4.57	3.60	13.54
CR14L103N30F25	REEL PR PAK1003-30 L/D CBL	3.07	5.10	13.54

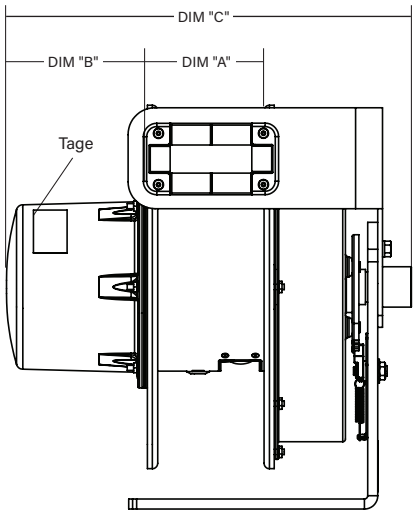

designed to be better.

Legrand, North America
60 Woodlawn Street
West Hartford, CT 06110
1.877.BY.LEGRAND (295.3472)
www.legrand.us

905.738.9195
www.legrand.ca

FOLLOW US

©2022 Legrand. All Rights Reserved. CS3191 08/22