PASS & SEYMOUR®

1200 Series Industrial Spring-Driven Cable Reel

For harsh environments and heavy-duty use

1200 SERIES

Industrial-grade 1200 Series Cable Reels are precision machines, built with a minimum of components to provide years of reliable service with little or no maintenance. Made of all-steel construction in the USA, these cable reels are ideal for assembly and fabrication work areas, conveyors, utility trucks, automotive and truck work bays, and much more.

- Made in USA
- All steel construction with fiberglass/nylon drum, yellow powder-coat finish
- UL/CSA Listed

Product Features

- All-steel construction with fiberglass/nylon drum
- Durable yellow or black powder-coated finish
- Options include ball stop only or receptacle box
- Operating temperature range of -22°F to 194°F (-30°C to 90°C)
- Adjustable cable guide arm with 12 positions to direct cables wherever you need them
- Smooth-running 4-roller guide for minimum cable stress
- Ratchet that locks the spool to keep cable at specific extension and disengages by pulling
- Adjustable ball stop that limits cable retraction and prevents damage to cord end accessories
- Precision slip ring assembly for long life
- 6-foot feeder cord
- Safety chain hole
- Cable included
- UL and CSA Listed
- One-year warranty

Product Components

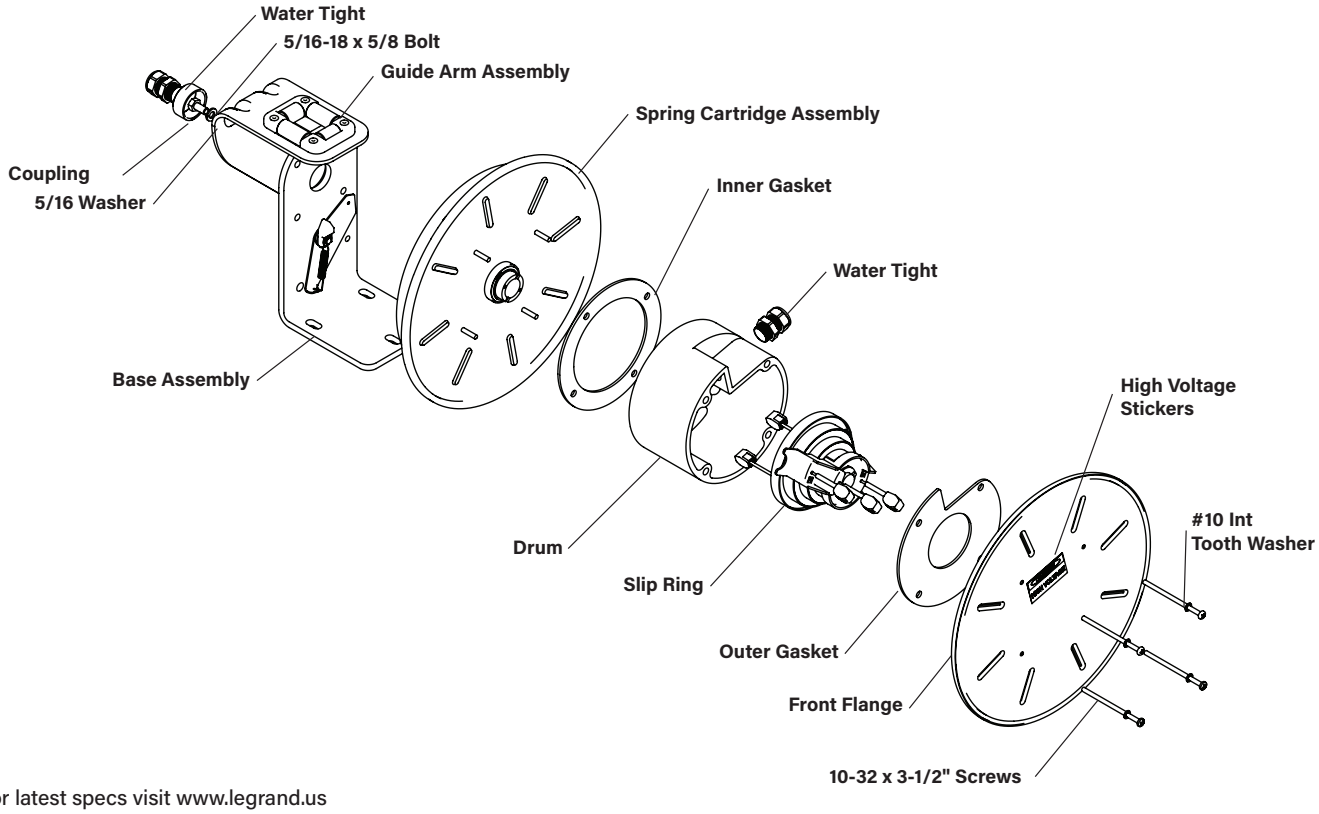

Ordering Information

1200 Series Cable Reel

Catalog Number	Color	Cable Length	Application	AWG/C	Amperage	End Accessory
CR12L123N50F20	Yellow	50 ft	Lift/Drag	12AWG 3C	20	None
CR12L123N35F20	Yellow	35 ft	Lift/Drag	12AWG 3C	20	None
CR12L123N25F20B	Black	25 ft	Lift/Drag	12AWG 3C	20	None
CR12L123N25F20	Yellow	25 ft	Lift/Drag	12AWG 3C	20	None
CR12L123N50R20	Yellow	50 ft	Lift/Drag	12AWG 3C	20	20A Quad RB
CR12L123N25R20	Yellow	25 ft	Lift/Drag	12AWG 3C	20	20A Quad RB
CR12L123N30F20	Yellow	30 ft	Lift/Drag	12AWG 3C	20	None
CR12L123N50F20B*	Black	50 ft	Lift/Drag	12AWG 3C	20	None
CR12L123N30F20B	Black	30 ft	Lift/Drag	12AWG 3C	20	None
CR12L124N25F16	Yellow	25 ft	Lift/Drag	12AWG 4C	16	None
CR12L124N35F16	Yellow	35 ft	Lift/Drag	12AWG 4C	16	None
CR12L124N35F16B	Black	35 ft	Lift/Drag	12AWG 4C	16	None
CR12L143N50F15	Yellow	50 ft	Lift/Drag	14AWG 3C	15	None
CR12L143N30F15	Yellow	30 ft	Lift/Drag	14AWG 3C	15	None
CR12L143N40F15	Yellow	40 ft	Lift/Drag	14AWG 3C	15	None
CR12L143N50F15B	Black	50 ft	Lift/Drag	14AWG 3C	15	None
CR12L143N30F15B	Black	30 ft	Lift/Drag	14AWG 3C	15	None
CR12L144N35F12	Yellow	35 ft	Lift/Drag	14AWG 4C	12	None
CR12L163N50F10	Yellow	50 ft	Lift/Drag	16AWG 3C	10	None
CR12L163N25F10	Yellow	25 ft	Lift/Drag	16AWG 3C	10	None
CR12L163N35F10	Yellow	35 ft	Lift/Drag	16AWG 3C	10	None
CR12L163N50F10B	Black	50 ft	Lift/Drag	16AWG 3C	10	None
CR12L163N25F10B	Black	25 ft	Lift/Drag	16AWG 3C	10	None
CR12L163N35F10B	Black	35 ft	Lift/Drag	16AWG 3C	10	None
CR12L164N35F08	Yellow	35 ft	Lift/Drag	16AWG 4C	8	None
CR12L164N50F08	Yellow	50 ft	Lift/Drag	16AWG 4C	8	None
CR12L164N50F08B	Black	50 ft	Lift/Drag	16AWG 4C	8	None

* These cable reel feeder cables do not have molded plugs and are to be hardwired (CR12L123N30F20, CR12L123N30F20B)

Dimensional Information

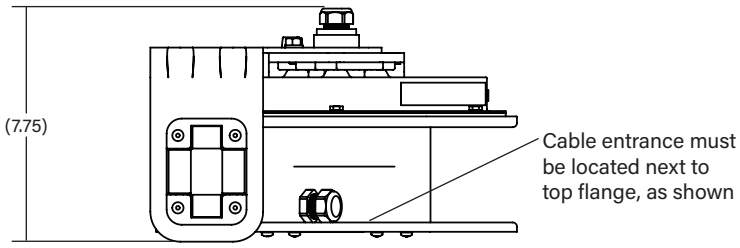

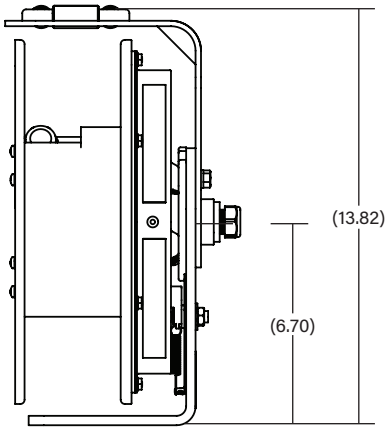

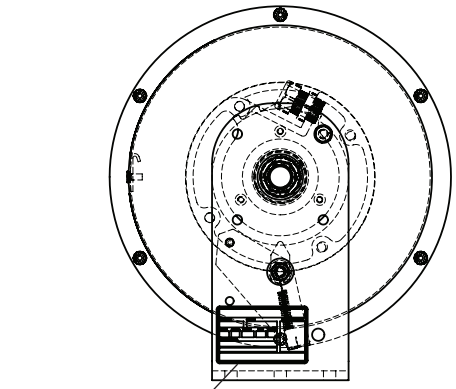

Drum/Ratchet Orientation Detail
Drum must be oriented this way relative to ratchet teeth. Some items not shown for clairty

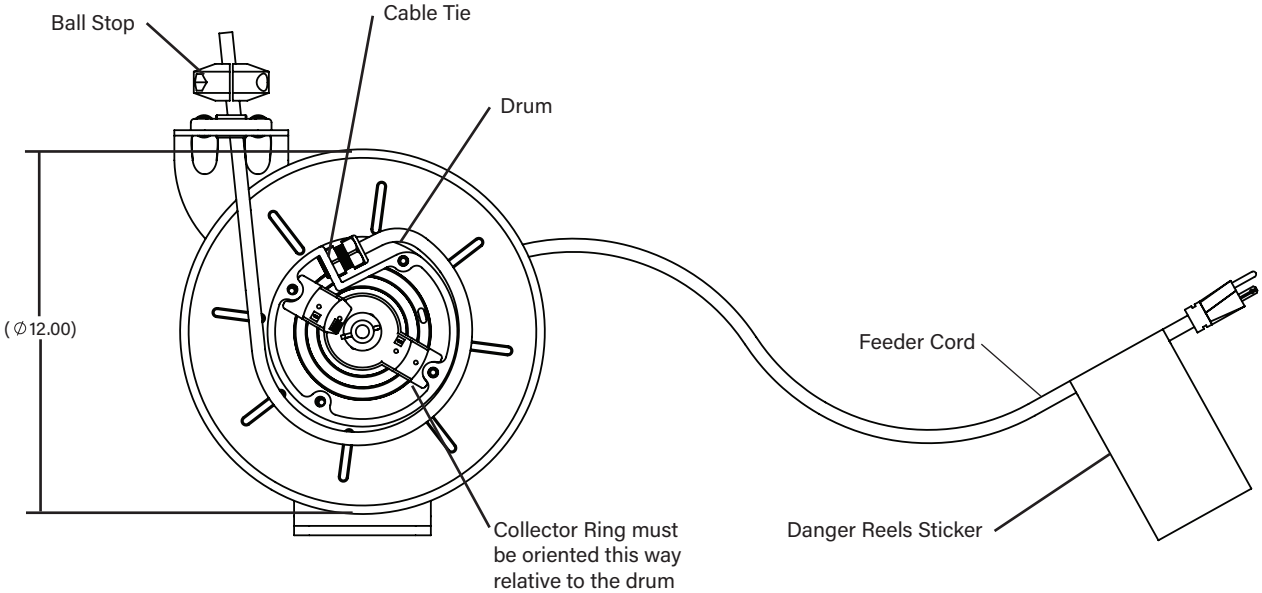

Gasket and Front Flange not shown in this view

Rating and Specifications

Cable Gauge	# Cond	Type	NEMA	Voltage	Current	Feeder Cord
16 AWG	2	SOW	4	600	13A	Cable
14 AWG	2	SOW	4	600	15A	Cable
12 AWG	3	SOW	4	600	25A	Cable
16 AWG	3	SOW	2	125	10A	Molded Plug
14 AWG	3	SJE	2	125	15A	Molded Plug
12 AWG	3	SJO	2	125	20A	Molded Plug
16 AWG	3	SOW	4	600	10A	Cable
14 AWG	3	SOW	4	600	15A	Cable
12 AWG	3	SOW	4	600	20A	Cable
14 AWG	4	SJE	4	300	12A	Cable
12 AWG	4	SOW	4	300	16A	Cable
16 AWG	4	SOW	4	600	8A	Cable
14 AWG	4	SOW	4	600	12A	Cable
12 AWG	4	SOW	4	600	16A	Cable

Wiring Chart

Cond #	Base Color
1	Green
2	Black
3	White
4	Red

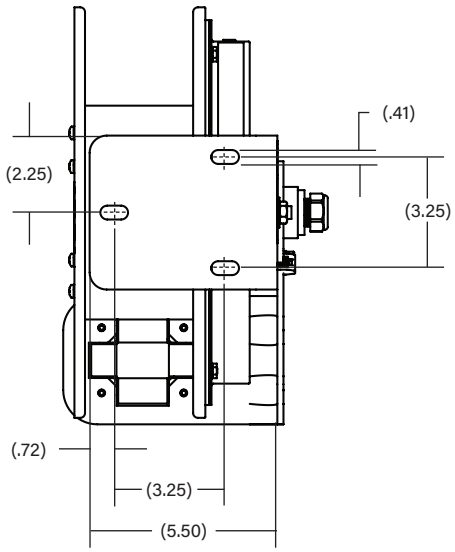

Base Mounting

designed to be better.

Legrand, North America
60 Woodlawn Street
West Hartford, CT 06110
1.877.BY.LEGRAND (295.3472)
www.legrand.us

905.738.9195
www.legrand.ca

FOLLOW US

©2022 Legrand. All Rights Reserved. CS3229 08/22