HIKVISION

iDS-2CD7146G0-IZ(H)S(Y)(D)
4 MP IR Varifocal Dome Network Camera

DarkFighter

60FPS | 140dB WDR | IK10+ | P Iris | H.265+ | IP67

DeepinView series

- High quality imaging with 4 MP resolution
- Excellent low-light performance via DarkFighter technology
- Clear imaging against strong back light due to 140 dB WDR technology
- Efficient H.265+ compression technology to save bandwidth and storage
- 5 streams to meet a wide variety of applications
- Water and dust resistant (IP67) and vandal proof (IK10)

▪ Function

Face Recognition

With embedded deep learning based algorithms, the camera is able to give the best shot of a target face through detecting, tracking, capturing, grading and selecting. The camera captures the face and outputs the features, such as gender, age, and expression. The camera uses face exposure function to dynamically adjust face area exposure of captures and ensures high face picture quality.

Perimeter Protection

With embedded deep learning based target detection and classification algorithms, the camera carries out the duty of perimeter protection, monitoring the actions of line crossing, intrusion, region entrance, and region exiting. The algorithms greatly filter out the mistaken alarm caused by the interference of leafs, lights, animal, flag, etc.

Multi-Target-Type Detection

With the embedded deep learning algorithms, the camera detects and captures the face, human body, vehicle in the specified region and outputs the features, such as gender, age, top color, and vehicle type.

▪ Specification

Camera	
Image Sensor	1/1.8" Progressive Scan CMOS
Max. Resolution	2560 × 1440
Min. Illumination	Color: 0.0005 Lux @ (F1.2, AGC ON), B/W: 0.0001 Lux @ (F1.2, AGC ON), B/W: 0 Lux with IR
Shutter Time	1 s to 1/100,000 s
Day & Night	IR cut filter
Angle Adjustment	Pan: 0° to 355°,tilt: 0° to 75°,rotate: 0° to 355°
Lens	
Focal Length & FOV	2.8 to 12 mm, horizontal FOV 107.4° to 39.8°, vertical FOV 56° to 22.4°, diagonal FOV 130.1° to 45.7° 8 to 32 mm, horizontal FOV 42.5° to 14°, vertical FOV 23.4° to 8°, diagonal FOV 49.7° to 17°
Focus	Auto, Semi-auto, Manual
Iris Type	P-iris
Aperture	2.8 to 12 mm: F1.2, 8 to 32 mm: F1.6
DORI	
DORI	2.8 to 12 mm: D: 149.0 m, O: 59.1 m, R: 29.8 m, I: 14.9 m 8 to 32 mm: D: 400 m, O: 158.7 m, R: 80 m, I: 40 m
Illuminator	
Supplement Light Type	IR
Supplement Light Range	2.8 to 12 mm: Monitoring: 40 m; 8 to 32 mm: Monitoring: 60 m
Smart Supplement Light	Yes
IR Wavelength	850 nm
Video	
Main Stream	50 Hz: 50 fps (2560 × 1440, 1920 × 1080m 1280 × 720) 60 Hz: 60 fps (2560 × 1440, 1920 × 1080, 1280 × 720)
Sub-Stream	50 Hz: 25 fps (704 × 576, 640 × 480) 60 Hz: 30 fps (704 × 480, 640 × 480)
Third Stream	50 Hz: 25 fps (1920 × 1080, 1280 × 720, 704 × 576, 640 × 480) 60 Hz: 30 fps (1920 × 1080, 1280 × 720, 704 × 480, 640 × 480)
Fourth Stream	50 Hz: 25 fps (704 × 576, 640 × 480) 60 Hz: 30 fps (704 × 480, 640 × 480)
Fifth Stream	50 Hz: 25 fps (704 × 576, 640 × 480) 60 Hz: 30 fps (704 × 480, 640 × 480)
Video Compression	Main stream: H.265+/H.265/H.264+/H.264, Sub-stream: H.265/H.264/MJPEG, Third stream: H.265/H.264, Fourth stream: H.265/H.264/MJPEG, Fifth stream: H.265/H.264/MJPEG
Video Bit Rate	32 Kbps to 8 Mbps

H.264 Type	Baseline Profile, Main Profile, High Profile
H.265 Type	Main Profile
Bit Rate Control	CBR, VBR
Scalable Video Coding (SVC)	H.264 and H.265 encoding
Region of Interest (ROI)	4 fixed region(s) for each stream
Target Cropping	Yes
e-PTZ	Support Preset, Patrol, and Auto Tracking settings
Audio	
Audio Type	Mono sound
Audio Compression	G.711/G.722.1/G.726/MP2L2/PCM/MP3/AAC-LC
Audio Bit Rate	64 Kbps (G.711ulaw/G.711alaw)/16 Kbps (G.722.1)/16 Kbps (G.726)/32 to 192 Kbps (MP2L2)/8 to 320 Kbps (MP3)/16 to 64 Kbps (AAC-LC)
Audio Sampling Rate	8 kHz/16 kHz/32 kHz/44.1 kHz/48 kHz
Environment Noise Filtering	Yes
Network	
Protocols	TCP/IP, ICMP, HTTP, HTTPS, FTP, DHCP, DNS, DDNS, RTP, RTSP, RTCP, PPPoE, NTP, UPnP, SMTP, SNMP, IGMP, 802.1X, QoS, IPv6, UDP, Bonjour, SFTP, SRTP
Simultaneous Live View	Up to 20 channels
API	Open Network Video Interface (Profile S, Profile G, Profile T),ISAPI,ISUP
User/Host	Up to 32 users 3 user levels: administrator, operator, and user
Security	Password protection, complicated password, HTTPS encryption, 802.1X authentication (EAP-TLS, EAP-LEAP, EAP-MD5), watermark, IP address filter, basic and digest authentication for HTTP/HTTPS, WSSE and digest authentication for Open Network Video Interface, RTP/RTSP OVER HTTPS, Control Timeout Settings, Security Audit Log, TLS 1.2
Client	iVMS-4200,Hik-Connect
Web Browser	Plug-in required live view: IE10, IE11, Plug-in free live view: Chrome 57.0+, Firefox 52.0+, Not recommended: Chrome 57.0+, Firefox 52.0+, Safari12+
Network Storage	NAS (NFS, SMB/CIFS),Auto Network Replenishment (ANR), Together with high-end Hikvision memory card, memory card encryption and health detection are supported.
Image	
Image Parameters Switch	Yes
Image Settings	Saturation, brightness, contrast, sharpness, AGC, white balance, adjustable by client software or web browser
Day/Night Switch	Day, Night, Auto, Schedule, Alarm Trigger
Wide Dynamic Range (WDR)	140 dB
Image Enhancement	BLC, HLC, 3D DNR, Defog, EIS
Privacy Mask	8 programmable polygon privacy masks, mask color or mosaic configurable
Picture Overlay	LOGO picture can be overlaid on video with 128 × 128 24 bit bmp format.
Interface	
Video Output	1 Vp-p Composite Output (75 Ω/CVBS) (Only for debugging)
Ethernet Interface	1 RJ45 10 M/100 M/1000 M self-adaptive Ethernet port

On-Board Storage	Built-in memory card slot, support microSD/microSDHC/microSDXC card, up to 256 GB
Built-in Microphone	Yes,2 built-in microphone(s)
Built-in Speaker	Max. power consumption: 1.5 W, max. sound pressure level: 98 dB, speaker range: 10 m
Audio	1 input (line in), 3.5 mm connector, three-contact, max. input amplitude: 3.3 Vpp, input impedance: 4.7 KΩ, interface type: non-equilibrium, 1 output (line out), 3.5 mm connector, three-contact, max. output amplitude: 3.3 Vpp, output impedance: 100 Ω, interface type: non-equilibrium, mono sound
Alarm	2 input(s), 2 output(s) (max. 24 VDC/24 VAC, 1 A)
RS-485	1 RS-485 (Half duplex, HIKVISION, Pelco-P, Pelco-D, self-adaptive)
Reset Key	Yes
Power Output	12 VDC, max. 100 mA
Event	
Basic Event	Motion detection (support alarm triggering by specified target types (human and vehicle)), video tampering alarm, network disconnected, IP address conflict, illegal login, HDD full, HDD error, video quality diagnosis, vibration detection
Smart Event	Line crossing detection, intrusion detection, region entrance detection, region exiting detection (support alarm triggered by specified target types (human and vehicle)), scene change detection, audio exception detection, defocus detection
Linkage	Upload to FTP/NAS/memory card, notify surveillance center, send email, trigger alarm output, trigger recording, trigger capture
Deep Learning Function	
Multi-target-type Detection	Supports simultaneous detection and capture of human body, face, and vehicle, Gets 7 face features, Gets 13 human body features, Gets 2 vehicle features
Face Capture	Detects up to 60 faces simultaneously, Supports swing left and right from -60° to 60°, tilt up and down from -30° to 30°, Uploads face with background and closed-up face pictures
Face Comparison	Up to 10 face libraries. 30,000 faces for each library. 150,000 faces in total. , Face comparison speed up to 60 per frame., Recognizes face identity via face modeling, grading and comparing to those in face library, Supports face library encryption
Metadata	Intrusion detection, line crossing detection, region entrance detection, region exiting detection, face capture
General	
Power	12 VDC ± 25%, 0.97 A, max. 11.43 W, three-core terminal block, reverse polarity protection, 24 VAC ± 25%, 0.73 A, max. 10.67 W, PoE: 802.3at, Type 2, Class 4, 42.5 V to 57 V, 0.19 A to 0.28 A, max. 11.92 W
Material	Base: metal, cover: metal
Dimension	Ø144.3 mm × 114.1 mm (Ø5.7" × 4.5")
Package Dimension	244 mm × 174 mm × 173 mm (9.6" × 6.9" × 6.8")
Weight	Approx. 990 g (2.0 lb.)
With Package Weight	Approx. 1425 g (3.1 lb.)

Storage Conditions	-30 °C to 60 °C (-22 °F to 140 °F). Humidity 95% or less (non-condensing)
Startup and Operating Conditions	-30 °C to 60 °C (-22 °F to 140 °F). With heater model (-H): -40 °C to 60 °C (-40 °F to 140 °F). Humidity 95% or less (non-condensing)
Language	33 languages: English, Russian, Estonian, Bulgarian, Hungarian, Greek, German, Italian, Czech, Slovak, French, Polish, Dutch, Portuguese, Spanish, Romanian, Danish, Swedish, Norwegian, Finnish, Croatian, Slovenian, Serbian, Turkish, Korean, Traditional Chinese, Thai, Vietnamese, Japanese, Latvian, Lithuanian, Portuguese (Brazil), Ukrainian
General Function	Heartbeat, one-key reset, mirror, password protection, watermark
Cable Length	0.25 m (0.8 ft.)
Approval	
EMC	FCC: 47 CFR Part 15, Subpart B, CE-EMC: EN 55032: 2015, EN 61000-3-2:2019, EN 61000-3-3: 2013+A1:2019, EN 50130-4: 2011 +A1: 2014, EN50121-4 RCM: AS/NZS CISPR 32: 2015, IC: ICES-003: Issue 7, KC: KN32: 2015, KN35: 2015
Safety	UL: UL 62368-1, CB: IEC 62368-1: 2014+A11, CE-LVD: EN 62368-1: 2014/A11: 2017, BIS: IS 13252 (Part 1): 2010/IEC 60950-1: 2005, LOA: IEC/EN 60950-1
Environment	CE-RoHS: 2011/65/EU, WEEE: 2012/19/EU, Reach: Regulation (EC) No 1907/2006
Protection	IP67: IEC 60529-2013,IK10: IEC 62262:2002
Anti-Corrosion Protection	-Y: NEMA 4X (NEMA 250-2018)
Other	PVC FREE

▪ Available Model

iDS-2CD7146G0-IZS (D) (2.8 to 12 mm, 8 to 32 mm)

iDS-2CD7146G0-IZHSY (D) (2.8 to 12 mm, 8 to 32 mm)

▪ Typical Application

Hikvision products are classified into three levels according to their anti-corrosion performance. Refer to the following description to choose for your using environment.

-Y model: This model has MODERATE PROTECTION.
Without -Y model: This model has NO SPECIFIC PROTECTION.

Level	Description
Top-level protection	Hikvision products at this level are equipped for use in areas where professional anti-corrosion protection is a must. Typical application scenarios include coastlines, docks, chemical plants, and more.
Moderate protection	Hikvision products at this level are equipped for use in areas with moderate anti-corrosion demands. Typical application scenarios include coastal areas about 2 kilometers (1.24 miles) away from coastlines, as well as areas affected by acid rain.
No specific protection	Hikvision products at this level are equipped for use in areas where no specific anti-corrosion protection is needed.

▪ Dimension

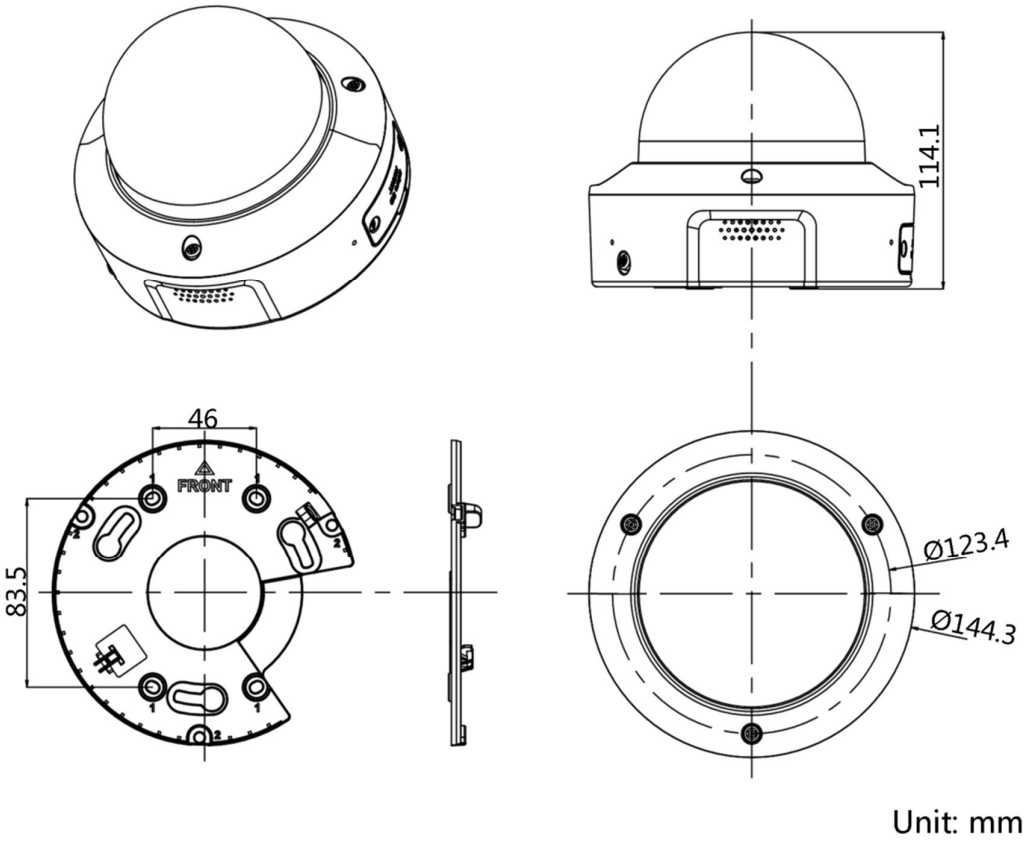

▪ Accessory

▪ Optional

WML+ PC160 Wall Mount	DS-1476ZJ-Y Corner Mount	RCM-VH In-Ceiling Mount	PM1 Vertical Pole Mount	CM1 Corner Mount

DS-1475ZJ-Y Vertical Pole Mount	CPM + PC 160 Pendant Mount	DS-1273ZJ-160 AKS Wall Mount

Distributed by

Headquarters
No.555 Qianmo Road, Binjiang District,
Hangzhou 310051, China
T +86-571-8807-5998
overseasbusiness@hikvision.com

Hikvision USA
T +1-909-895-0400
sales.usa@hikvision.com

Hikvision Europe
T +31-23-5542770
sales.eu@hikvision.com

Hikvision UK & Ireland
T +01628-902140
sales.uk@hikvision.com

Hikvision UAE
T +971-4-4432090
salesme@hikvision.com

Hikvision Russia
T +7-495-669-67-99
saleru@hikvision.com

Hikvision Australia
T +61-2-8599-4233
salesau@hikvision.com

Hikvision Italy
T +39-0438-6902
info.it@hikvision.com

Hikvision South Africa
Tel: +27 (10) 0351172
sale.africa@hikvision.com

Hikvision Singapore
T +65-6684-4718
sg@hikvision.com

Hikvision Korea
T +82-(0)31-731-8817
sales.korea@hikvision.com

Hikvision India
T +91-22-28469900
sales@pramahikvision.com

Hikvision Brazil
T +55 11 3318-0050
Latam.support@hikvision.com

Hikvision France
T +33(0)1-85-330-450
info.fr@hikvision.com

Hikvision Spain
T +34-91-737-16-55
info.es@hikvision.com

Hikvision Poland
T +48-22-460-01-50
info.pl@hikvision.com

Hikvision Canada
T +1-866-200-6690
sales.canada@hikvision.com

Hikvision Turkey
T +90 (216)521 7070- 7074
sales.tr@hikvision.com

Hikvision Kazakhstan
T +7-727-9730667
nikia.panfilov@hikvision.ru

Hikvision Tashkent
T +99-87-1238-9438
uzb@hikvision.ru

Hikvision Indonesia
T +62-21-2933759
Sales.Indonesia@hikvision.com

Hikvision Thailand
T +662-275-9949
sales.thailand@hikvision.com

Hikvision Malaysia
T +601-7652-2413
sales.my@hikvision.com

Hikvision Vietnam
T +84-974270888
sales.vt@hikvision.com

Hikvision Hong Kong
T +852-2151-1761
info.hk@hikvision.com

Hikvision Colombia
sales.colombia@hikvision.com

© Hikvision Digital Technology Co., Ltd. 2020 | Data subject to change without notice |