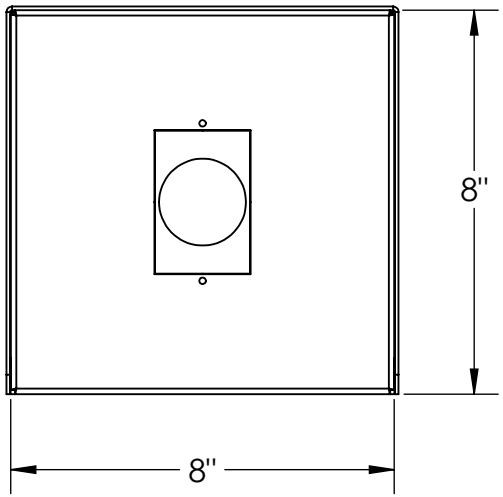

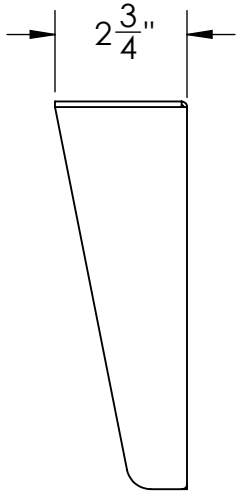

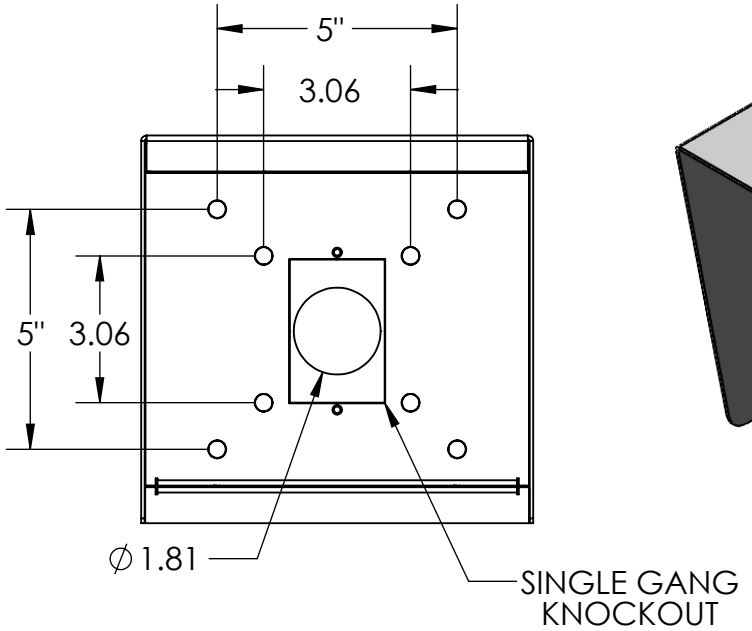

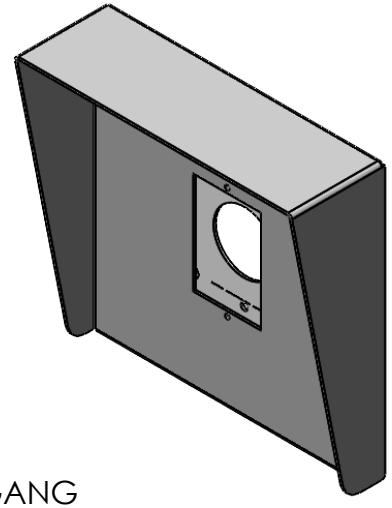

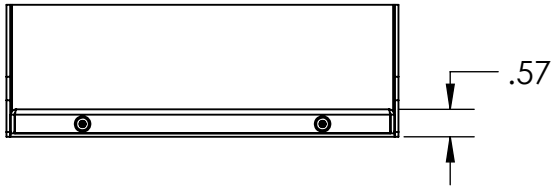

NOTES:
1. MATERIAL OF CONSTRUCTION IS MILD STEEL COATED IN 2-4 MILS BLACK WRINKLE POWDER COATING.

PEDESTALPRO.COM 1-800-660-3072	UNLESS OTHERWISE SPECIFIED: DIMENSIONS ARE IN INCHES TOLERANCES: FRACTIONAL ±1/32 ANGULAR: ±2° TWO PLACE DECIMAL ±0.010 THREE PLACE DECIMAL ±0.005 INTERPRET GEOMETRIC TOLERANCING PER: ASME Y14.5 -2009	NAME / DATE DRAWN CHECKED **PROPRIETARY AND CONFIDENTIAL** THE INFORMATION CONTAINED IN THIS DRAWING IS THE SOLE PROPERTY OF PEDESTALPRO LLC. ANY REPRODUCTION IN PART OR AS A WHOLE WITHOUT THE WRITTEN PERMISSION OF PEDESTALPRO LLC IS PROHIBITED.	TITLE: INSTALLATION Thursday, September 13, 2018 1:05:51 PM WEIGHT: 4.051	SIZE A PART NO. J-HOOD-CS-8X8 NO SCALE REV 0 SHEET 1 OF 8

ITEM NO.	PART NUMBER	DESCRIPTION	QTY.
1	J-HOOD-CS-8X8 HOOD	HOOD ASSEMBLY	1
2	J-HOOD-CS-8X8 MID PLATE	DEVICE MOUNTING PLATE	1
3	J-HOOD-CS-8X8 BOTTOM CLOSURE	HOOD ASSEMBLY	1
4	J-HOOD-CS-8X8 BACK PLATE	MOUNTING PLATE	1
5	J-HOOD-CS-8X8 HOOK	MOUNTING HOOK	1
6	--	6-32 X 1/2" PAN HEAD SECURITY SCREW	2

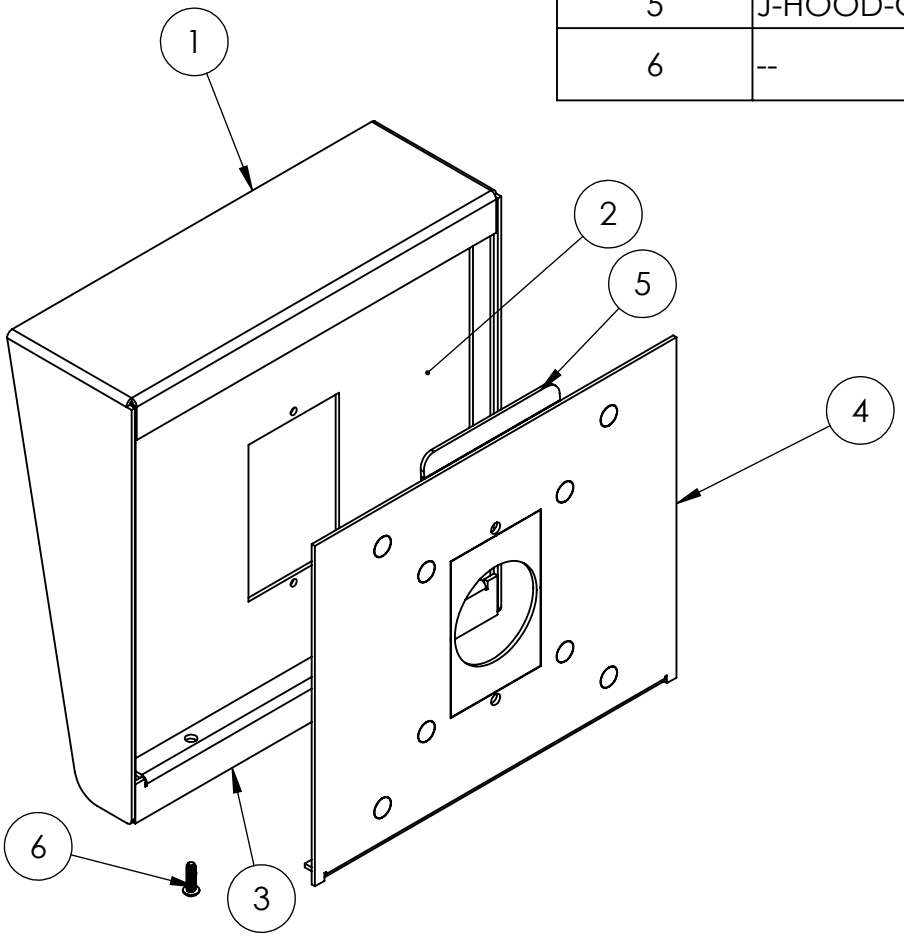

PEDESTALPRO.COM
1-800-660-3072

UNLESS OTHERWISE SPECIFIED:

DIMENSIONS ARE IN INCHES
TOLERANCES:
FRACTIONAL ±1/32
ANGULAR: ±2°
TWO PLACE DECIMAL ±0.010
THREE PLACE DECIMAL ±0.005

INTERPRET GEOMETRIC TOLERANCING PER: ASME Y14.5 -2009

	NAME	DATE
DRAWN		
CHECKED		

PROPRIETARY AND CONFIDENTIAL

THE INFORMATION CONTAINED IN THIS DRAWING IS THE SOLE PROPERTY OF PEDESTALPRO LLC. ANY REPRODUCTION IN PART OR AS A WHOLE WITHOUT THE WRITTEN PERMISSION OF PEDESTALPRO LLC IS PROHIBITED.

TITLE:

ASSEMBLY

Thursday, September 13, 2018 1:05:51 PM

SIZE **A**

PART NO. J-HOOD-CS-8X8

REV 0

WEIGHT: 4.051

NO SCALE

SHEET 2 OF 8