# DSA E-Series (E2800 60-bay)

DSA-N6C8X4-60AT | DSA-N6C8X8-60AT | DSA-N6C8XC-60AT | DSX-N6D8X4-60AT | DSX-N6D8X8-60AT | DSX-N6D8XC-60AT | DSX-NRCK40-INT8

**en** Installation manual

# Table of contents


| | | |
|---|---|---|
| **1** | **Safety** | **5** |
| **1.1** | Safety message explanation | **5** |
| **1.2** | Safety precautions | **5** |
| **1.3** | Important safety instructions | **5** |
| **1.4** | Warning notices | **7** |
| **1.5** | Caution notices | **8** |
| **1.6** | Notices | **9** |
| **2** | **Introduction** | **10** |
| **2.1** | Hardware registration | **10** |
| **2.2** | Additional equipment | **10** |
| **2.3** | Additional documentation | **10** |
| **3** | **System overview** | **11** |
| **3.1** | Device views | **11** |
| **3.2** | LED description | **12** |
| **3.2.1** | LEDs on the operator display panel | **12** |
| **3.2.2** | LEDs on the controller unit | **13** |
| **3.2.3** | LEDs on the I/O modules | **15** |
| **3.2.4** | LEDs on the drives | **16** |
| **3.2.5** | LEDs on the drive drawer | **17** |
| **3.2.6** | LEDs on the power canister | **18** |
| **3.2.7** | LEDs on the fan canister | **18** |
| **4** | **Installation** | **20** |
| **4.1** | Installing a 60-bay unit | **20** |
| **4.2** | Installing a 60-bay unit with SuperRail | **21** |
| **4.2.1** | Installing SuperRail to square-hole four-post rack | **21** |
| **4.2.2** | Installing SuperRail to round-hole four-post rack | **23** |
| **4.3** | Installing the drives | **26** |
| **4.4** | Installing the front bezel and end caps | **26** |
| **4.5** | Setting the unit ID using the ODP button | **27** |
| **5** | **Connection** | **29** |
| **5.1** | Connecting the expansion units | **29** |
| **5.2** | Connecting the controller unit to the network | **29** |
| **5.3** | Connecting the controller unit to the management hosts | **30** |
| **5.4** | Connecting the units to the power supply | **31** |
| **5.5** | Supported connections | **32** |
| **6** | **Turning on/off AC power** | **34** |
| **6.1** | Turning on AC power | **34** |
| **6.2** | Turning off AC power | **34** |
| **7** | **Configuring the storage system** | **36** |
| **8** | **Maintenance** | **38** |
| **8.1** | Replacing a drive in a 60-bay unit | **38** |
| **8.1.1** | Preparing to replace a drive | **39** |
| **8.1.2** | Removing a drive | **40** |
| **8.1.3** | Installing a drive | **41** |
| **8.1.4** | After replacing a drive | **42** |
| **8.2** | Replacing a power canister | **43** |
| **8.2.1** | Preparing to remove a power canister | **44** |
| **8.2.2** | Removing a power canister | **45** |

| | | |
|---|---|---|
| **8.2.3** | Installing a power canister | **45** |
| **8.2.4** | After replacing a power canister | **45** |
| **8.3** | Replacing a fan canister | **46** |
| **8.3.1** | Preparing to remove a fan canister | **47** |
| **8.3.2** | Removing and replacing a fan canister | **48** |
| **8.3.3** | After replacing a fan canister | **48** |
| **8.4** | Seven-segment display codes | **49** |
| **8.4.1** | Seven-segment display sequence codes | **49** |
| **8.4.2** | Seven-segment display codes when controller turns on | **50** |
| **8.4.3** | Seven-segment display use cases | **50** |
| **8.4.4** | Seven-segment display lock-down codes | **52** |
| **8.5** | Collecting support data for the storage system | **53** |
| **9** | **Support services and Bosch Academy** | **55** |

# 1 Safety

## 1.1 Safety message explanation

**Notice!**
Indicates a situation which, if not avoided, could result in damage to the equipment or environment, or data loss.

**Caution!**
Indicates a hazardous situation which, if not avoided, could result in minor or moderate injury.

**Warning!**
Indicates a hazardous situation which, if not avoided, could result in death or serious injury.

## 1.2 Safety precautions

**Caution!**
The Low Voltage power supply unit must comply with EN/UL 60950. The power supply must be a SELV-LPS unit or a SELV - Class 2 unit (Safety Extra Low Voltage - Limited Power Source).

**Caution!**
Installation should only be performed by qualified service personnel in accordance with applicable local codes.

## 1.3 Important safety instructions

Read, follow, and retain for future reference all of the following safety instructions. Follow all warnings before operating the device.

- Unplug the unit from the outlet before cleaning. Follow any instructions provided with the unit.
- Clean only with a dry cloth. Do not use liquid cleaners or aerosol cleaners.
- Do not install device near any heat sources such as radiators, heaters, stoves, or other equipment (including amplifiers) that produce heat.
- Never spill liquid of any kind on the device.
- Take precautions to protect the device from power and lightning surges.
- Unless qualified, do not attempt to service a damaged device yourself. Refer all servicing to qualified service personnel.
- Install in accordance with the manufacturer's instructions in accordance with applicable local codes.
- Use only attachments/accessories specified by the manufacturer.
- Protect all connection cables from possible damage, particularly at connection points.
- Do not defeat the safety purpose of a polarized or ground-type plug.
- Permanently connected devices must have an external, readily operable mains plug or all-pole mains switch in accordance with installation rules.
- Pluggable devices must have an easily accessible socket-outlet installed near the equipment.

- The plug-socket combination must be accessible at all times, because it serves as the main disconnecting device.
- Any openings in the unit enclosure are provided for ventilation to prevent overheating and ensure reliable operation. Do not block or cover these openings.
- If you install this device in an enclosure, make sure the enclosure is properly ventilated according to the manufacturer's instructions.
- Install the unit only in a dry, weather-protected location.
- Do not use this unit near water, for example near a bathtub, washbowl, sink, laundry basket, in a damp or wet basement, near a swimming pool, in an outdoor installation, or in any area classified as a wet location.
- To reduce the risk of fire or electrical shock, do not expose this unit to rain or moisture.
- Never push objects of any kind into this unit through openings as they may touch dangerous voltage points or short-out parts that could result in a fire or electrical shock.
- Power supply cords should be routed so that they are not likely to be walked on or pinched by items placed upon or against them, playing particular attention to cords and plugs, convenience receptacles, and the point where they exit from the appliance.
- Operate the unit only from the type of power source indicated on the label. Use only the power supply provided or power supply units with UL approval and a power output according to LPS or NEC Class 2.
- Do not open or remove the cover to service this unit yourself. Opening or removing covers may expose you to dangerous voltage or other hazards. Refer all servicing to qualified service personnel.
- Be sure the service technician uses replacement parts specified by the manufacturer. Unauthorized substitutions could void the warranty and cause fire, electrical shock, or other hazards.
- Do safety inspections after service or repairs to the device to make sure the device operates properly.
- Observe the relevant electrical engineering regulations.
- When installing in a switch cabinet, ensure that the unit and the power supply units have sufficient grounding.
- Connect the unit to an earthed mains socket.
- Use proper CMOS/MOS-FET handling precautions to avoid electrostatic discharge (ESD).
- For protection of the device, the branch circuit protection must be secured with a maximum fuse rating of 16 A. This must be in accordance with *NEC800 (CEC Section 60)*.
- Disconnect the power before moving the unit. Move the unit with care. Excessive force or shock may damage the unit and the hard disk drives.
- All the input/output ports are Safety Extra Low Voltage (SELV) circuits. SELV circuits should only be connected to other SELV circuits.
- If safe operation of the unit cannot be ensured, remove it from service and secure it to prevent unauthorized operation. In such cases, have the unit checked by Bosch Security Systems.
- Disconnect power supply and arrange for the device to be serviced by qualified personnel in the following cases, because safe operation is no longer possible:
  - The power cable/plug is damaged.
  - Liquids or foreign bodies have entered the device.
  - The device has been exposed to water or extreme environmental conditions.

  - The device is faulty despite correct installation/operation.
  - The device has fallen from a height, or the housing has been damaged.
  - The device was stored over a long period under adverse conditions.
  - The device performance is noticeably changed.
- Installation of the unit must comply with local and national electrical codes.
- Cluster media converters must be installed in a restricted access location.
- When installing the unit into a movable cabinet or rack, install from the bottom up for best stability.
- Use only manufacturer's supplied power cords and cables with manufacturer equipment.
- DC-based systems must be installed in a restricted access location and the two input power terminals for the DC power supply must be connected to separate isolated branch circuits.
- A qualified service person is required to make the DC power connection according to local and national electric codes / guidelines.
- Ensure your DC mains supply is earthed at the point of generation per IEC 60950-1.
- To reduce the risk of personal injury or equipment damage, allow internal components time to cool before touching them.
- Ensure that the equipment is properly supported or braced when installing options.
- This equipment is designed for connection to a grounded outlet. The grounding type plug is an important safety feature. To avoid the risk of electrical shock or damage to the equipment, do not disable this feature.
- Risk of electrical shock - If there is evidence of fire, water, or structural damage, never turn on the power to the equipment.
- Risk of electrical shock - Before removing or installing a power supply, turn off the power switch, and unplug the power cord.
- Pinching hazard - As you push the canister into the slot, ensure that your fingers are not pinched between the lever and the canister. The lever automatically moves toward the closed position as the canister is pushed into its slot.
- Do not remove more than one canister from the enclosure while power to the enclosure is turned on.
- Bosch products may contain Class 1 laser devices, Class 1M laser devices, or both.
- Keep away from moving fan blades.
- Do not use equipment in the cabinet as a shelf or work space.

## 1.4 Warning notices

This product relies on the building's installation for short-circuit (overcurrent) protection. Ensure that a fuse or circuit breaker no larger than 120 VAC, 20A U.S. (240 VAC, 16A international) is used on the phase conductors (all current-carrying conductors).

**Warning!**
High leakage current. Earth connection essential before connecting supply.

**Warning!**
To prevent personal injury or damage to the unit, never attempt to lift or tilt the unit using the handles of controller modules, power supplies, fans, and so on. These types of handles are not designed to support the weight of the unit.

**Warning!**
An electrical outlet that is not correctly wired could place hazardous voltage on metal parts of the system or the devices that attach to that system. It is the customer's responsibility to ensure that the outlet is correctly wired and grounded to prevent an electrical shock.

**Warning!**
To prevent electrical shock hazard, disconnect all power cables from the electrical outlet before relocating the system.

**Warning!**
Risk of bodily injury, A lead-acid battery can weigh up to 10.9kg (24.1lb). When you remove this type of battery, be prepared to support its weight. If the battery is dropped, the impact might cause bodily injury, including deep puncture wounds caused by the battery pins.

**Warning!**
For Class 1M laser products
Laser radiation. Do not view directly with optical instruments. Viewing the laser output with certain optical instruments (for example, eye loupes, magnifiers, and microscopes) within a distance of 100 mm might pose an eye hazard. Use of controls or adjustments or performance of procedures other than those specified herein might result in hazardous radiation exposure. Do not disassemble or remove any part of a small form-factor pluggable (SFP) transceiver because you might be exposed to laser radiation.

## 1.5 Caution notices

**Caution!**
The battery used in this device might present a risk of fire, explosion, or chemical burn if mistreated. DO NOT crush or puncture, short circuit external contacts, disassemble, dispose of in fire or water, heat above maximum temperature limit, or incinerate.

**Caution!**
DOUBLE POLE/NEUTRAL FUSING

**Caution!**
To avoid personal injury, before lifting this unit, remove all appropriate subassemblies per instructions to reduce the system weight.

**Caution!**
Equipment weighing less than 18 kg (39.7 lbs) can be lifted by one person.
Equipment weighing equal to or more than 18 kg (39.7 lbs) and less than 32 kg (70.5 lbs) requires two people to lift.
Equipment weighing equal to or more than 32 kg (70.5 lbs) and less than 55 kg (121.2 lbs) requires three people to lift.
Equipment weighing equal to or more than 55 kg (121.2 lbs) and less than 72 kg (158.7 lbs) requires four people to lift.
Equipment weighing equal to or more than 72 kg (158.7 lbs) requires a lifting device.

## 1.6 Notices

**Notice!**
This is a **class A** product. In a domestic environment this product may cause radio interference, in which case the user may be required to take adequate measures.

**Notice!**
Video loss is inherent to digital video recording; therefore, Bosch Security Systems cannot be held liable for any damage that results from missing video information.
To minimize the risk of losing information, we recommend multiple, redundant recording systems, and a procedure to back up all analog and digital information.

| | |
|---|---|
| | **Disposal**<br>Your Bosch product has been developed and manufactured using high-quality materials and components that can be reused.<br>This symbol means that electronic and electrical devices that have reached the end of their working life must be disposed of separately from household waste.<br>In the EU, separate collecting systems are already in place for used electrical and electronic products. Please dispose of these devices at your local communal waste collection point or at a recycling center. |

**Notice!**
Do not dispose batteries in household waste. Dispose of batteries only at suitable collection points and, in the case of lithium batteries, mask the poles.

**Caution!**
**Battery replacement - For qualified service personnel only**
A lithium battery is located inside the unit enclosure. To avoid danger of explosion, replace the battery as per instructions. Replace only with the same or equivalent type recommended by the manufacturer. Dispose of the replaced battery in an environmentally friendly way and not with other solid waste. Refer all servicing to qualified service personnel.

| | |
|---|---|
| | Do not place this unit on an unstable stand, tripod, bracket, or mount. The unit may fall, causing serious injury and/or serious damage to the unit. |

**Information on sales, delivery, storage, and working life period**
No restrictions or conditions apply for the sale or delivery of this product.
If stored under the specified conditions, the storage period is not restricted.
If used for the specified purpose in compliance with the safety instructions and technical specifications, the working life period of the product is in accordance with normal expectations for this type of product.

**Information on equipment use**
Device is for professional installation only. Operation of the devices is not intended for personal or household use. There are no restrictions to use the device in commercial and industrial areas, except those mentioned in the Safety information.

# 2 Introduction

This manual is written for professional system integrators and PC technicians. It provides information for the installation of the chassis. The installation should be done by experienced and qualified technicians only.
Before you start the installation, read and follow the safety instructions.

## 2.1 Hardware registration

We recommend that you register your device. If you already have an existing NetApp NOW account, add your device to it. If you have no NetApp NOW account, create a new account using the Bosch Product Registration page.

**Registering your device using an existing NetApp NOW account**
Sign in to your NetApp NOW account and register your device here.

**Creating a new account using the Bosch Product Registration page**
Register your product under:
https://www.boschsecurity.com/product-registration/

## 2.2 Additional equipment

You may need the following equipment:
- A Phillips No. 2 and a medium flat-blade screwdriver
- An ESD wrist strap
- An Ethernet switch or network hub
- Ethernet cables
- Management station or personal computer

## 2.3 Additional documentation

**More information**
For more information, software downloads, and documentation, go to www.boschsecurity.com and the corresponding product page.

# 3 System overview

## 3.1 Device views

### 60-bay dual controller unit or expansion unit - front view

| | | | |
|---|---|---|---|
| **1** | Status displays | **2** | Drive drawer 1 - 5 (drive drawer 1 is at the top and drive drawer 5 is at the bottom) |

### 60-bay dual controller unit - rear view

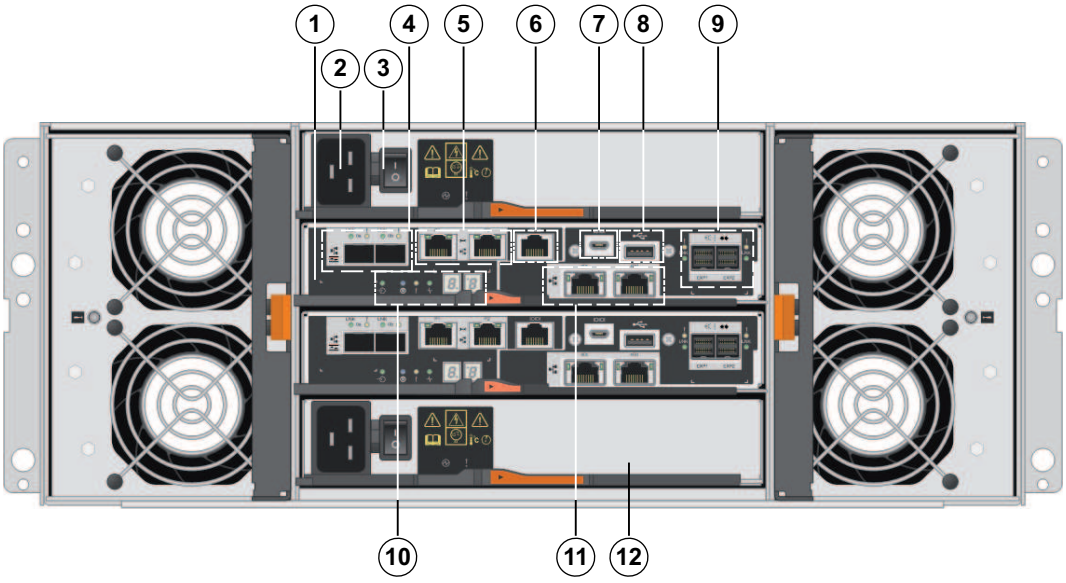


| | | | |
|---|---|---|---|
| **1** | Controller A | **2** | Mains connection 240 VAC |
| **3** | On/off switch | **4** | Channel 3 (left) / Channel 4 (right) - Host interface ports (Dual 10 GB iSCSI, optical)<br>**Note:** Use only RJ45 Base-T ports **or** optical ports. |

| | | | |
|---|---|---|---|
| **5** | Management port 1 (left) / Management port 2 (right) - Dual 1 Gigabit Ethernet<br>**Note:** Use only Port 1 per controller (default). | **6** | Serial port (RJ45) |
| **7** | Serial port (micro USB) | **8** | USB port (only for factory use) |
| **9** | Dual 12 Gb SAS drive expansion ports | **10** | Status display |
| **11** | Channel 5 (left) / Channel 6 (right) - Host interface ports (Dual 10 GB iSCSI, RJ45 Base-T)<br>**Note:** Use only RJ45 Base-T ports **or** optical ports. | **12** | Controller B (see Controller A) |

**60-bay expansion unit - rear view**

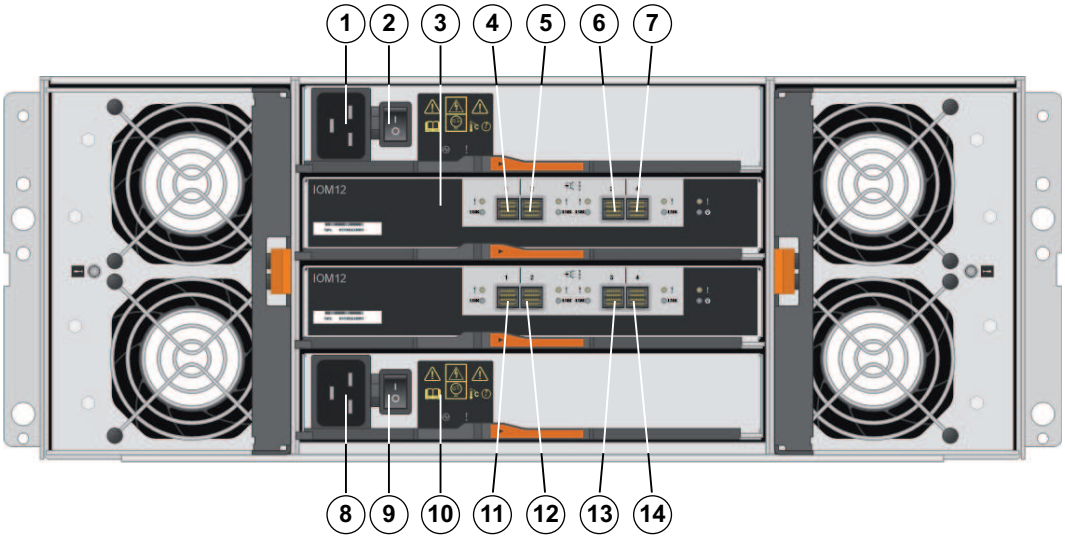


| | | | |
|---|---|---|---|
| **1** | Mains connection 240 VAC | **2** | On/off switch |
| **3** | IOM A | **4** | IOM A - SAS port 1 |
| **5** | IOM A - SAS port 2 | **6** | IOM A - SAS port 3 |
| **7** | IOM A - SAS port 4 | **8** | Mains connection 100 - 240 VAC |
| **9** | On/off switch | **10** | IOM B |
| **11** | IOM B - SAS port 1 | **12** | IOM B - SAS port 2 |
| **13** | IOM B - SAS port 3 | **14** | IOM B - SAS port 4 |

## 3.2 LED description

There are several LEDs on the front and rear of the chassis. The LEDs show the over-all status of the system and the activity and health of specific components.

### 3.2.1 LEDs on the operator display panel

Each controller unit and expansion unit has LEDs located on the operator display panel. The operator display panel is visible through the front bezel of a controller unit and through the left end cap of an expansion unit.

| | | | |
|---|---|---|---|
| **1** | 7-segment display | **2** | Power LED |
| **3** | Attention LED | **4** | Locate LED |
| **5** | Drive canister | | |

The following table describes the LEDs and their operational states:

| LED | Status indicator | Description |
|---|---|---|
| Power | Green | One or more power supplies are supplying power to the unit. |
| | Off | The unit is not receiving power. |
| Attention | Amber | There is an error with the function of one or more of the following:<br>– Unit<br>– Drives<br>– IOMs<br>– Power supplies<br>– Fans |
| | Off | The unit, drives, IOMs, power supply, and fans are functioning correctly. |
| Locate | Blue | There is an active request to physically locate the shelf.<br>Note: The Locate LED turns off automatically after 30 minutes. |

### 3.2.2 LEDs on the controller unit

The back of the controller unit includes LEDs that indicate the status of the controller. For example, the controller is active, the controller needs attention, or when there is Ethernet activity.

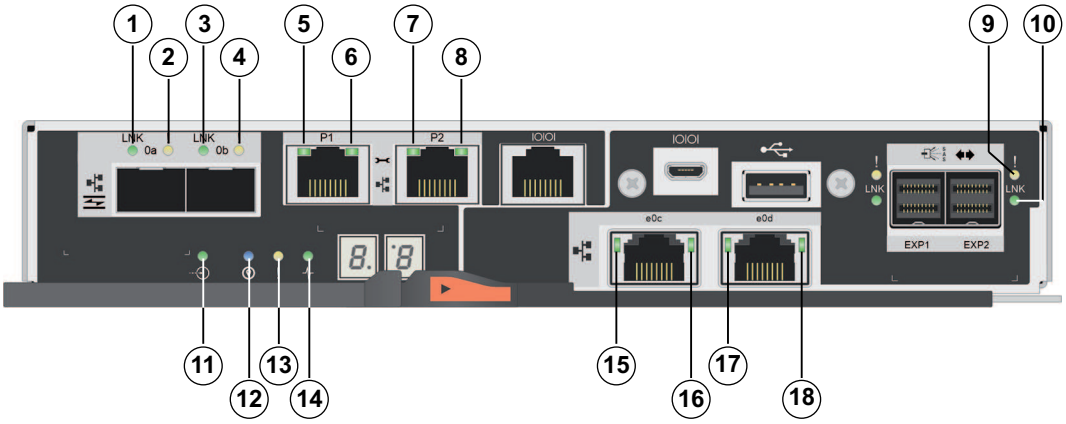


| | | | |
|---|---|---|---|
| **1** | Channel 3 - host port link status LED | **2** | Channel 3 - host port attention LED |
| **3** | Channel 4 - host port link status LED | **4** | Channel 4 - host port attention LED |
| **5** | Management port 1 - Ethernet status LED | **6** | Management port 1 - Ethernet activity LED |
| **7** | Management port 2 - Ethernet status LED | **8** | Management port 2 - Ethernet activity LED |
| **9** | SAS drive expansion port - attention LED | **10** | SAS drive expansion port - link status LED |
| **11** | Cache active LED | **12** | Locate LED |
| **13** | Attention LED | **14** | Activity LED |

The following table describes the LEDs and their operational states:

| LED | Status indicator | Description |
|---|---|---|
| Cache active | Green | The cache contains data not yet written to disk. |
| | Off | Either the cache is inactive or all data from the cache has been preserved in non-volatile memory. |
| Locate | Blue | There is an active request to physically locate the controller unit. |
| | Off | There is no active request to locate the controller unit. |
| Attention | Amber | The controller is faulty and requires operator attention, and the faulty component is serviceable. |
| | Off | The controller is operating normally. |
| Activity | Blinking green | The controller is active. |
| Ethernet activity (right) | Green | The link between the management port and the device to which it is connected (such as an Ethernet switch) is up. |

| LED | Status indicator | Description |
|---|---|---|
| | Off | There is no link between the controller and the connected Ethernet port. |
| | Blinking green | There is Ethernet activity. |
| Ethernet link state (left) | Green | Link is established. |
| | Off | No link is established. |
| SAS expansion port link | Green | Link is established. |
| | Off | No link is established. |
| SAS expansion port link fault | Amber | Port is degraded (one or more physical devices in the port are down). |
| | Off | Port is optimal. All physical devices in the port are up or all physical devices in the port are down since the LED is off if no cables are attached. |
| Host port link status (SFP host port, FC or iSCSI) | Green | The link is up (Fibre channel).<br>LED is solid: The link is up, but there is no activity (iSCSI).<br>LED is flashing: The link is up and there is activity (iSCSI).<br>LED is off: The link is down. |
| Host port attention (SFP host port, FC or iSCSI) | Amber | The port requires operator attention. |
| Host port link status (RJ-45 host port, iSCSI) | Green | LED is on: The link is established.<br>LED is off: No link is established. |
| Host port activity (RJ-45 host port, iSCSI) | Green | LED is on: The link is up with no activity.<br>LED is blinking: There is link activity.<br>LED is off: No link is established. |

### 3.2.3 LEDs on the I/O modules

The I/O module (IOM) includes the SAS ports for connecting the expansion units to the controller units or to other expansion units.

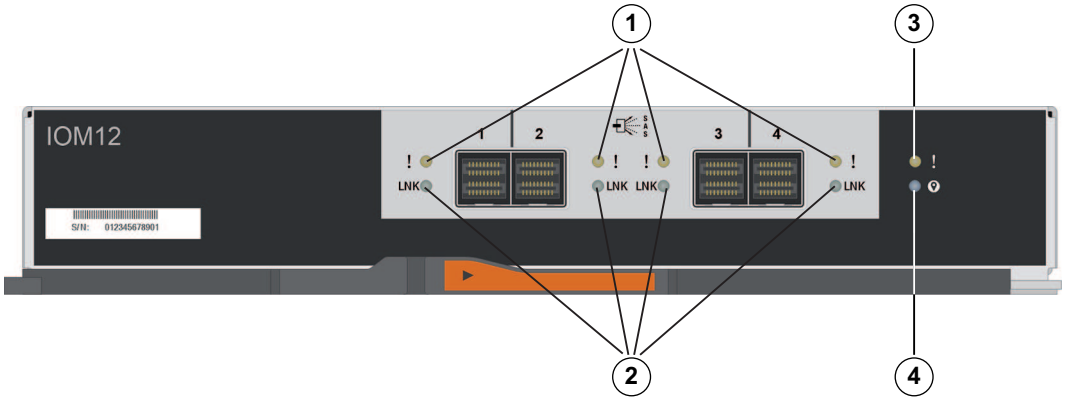

| | | | |
|---|---|---|---|
| **1** | SAS port attention LED | **2** | SAS port link LED |
| **3** | IOM attention LED | **4** | IOM locate LED |

The following table describes the LEDs and their operational states:

| LED | Status indicator | Description |
|---|---|---|
| Attention | Amber | The IOM is not functioning correctly. |
| | Off | The IOM is functioning correctly. |
| Locate | Blue | There is an active request to physically locate the expansion unit.<br>**Note:** When the **Locate** LED is activated, the **Locate** LED on the left end cap of the expansion unit is also activated.<br>The **Locate** LEDs turn off automatically after 30 minutes. |
| | Off | There is no active request to locate the expansion unit. |
| SAS port link | Green | The SAS port established a link (with either a controller or another expansion unit). |
| | Off | No link is established to another SAS port. |
| SAS port attention | Amber | One or more of the links in the port are not working properly. |
| | Off | The port is optimal and no link error has occurred. |

## 3.2.4 LEDs on the drives

The drives that are installed in the controller unit and the expansion unit include an Activity LED and an Attention LED.

| | | | |
|---|---|---|---|
| **1** | Activity LED | **2** | Attention LED |

The following table describes the LEDs and their operational states:

| LED | Status indicator | Description |
|---|---|---|
| Activity | Green | The drive has power. |
| | Blinking green | The drive has power, and I/O is in process. |
| Attention | Amber | An error occurred with the functioning of the drive. |

### 3.2.5 LEDs on the drive drawer

Each of the 5 drive drawers in the 60-bay controller unit and the 60-bay expansion unit includes a single Attention/Locate LED for the unit and 12 Activity LEDs for the drives.

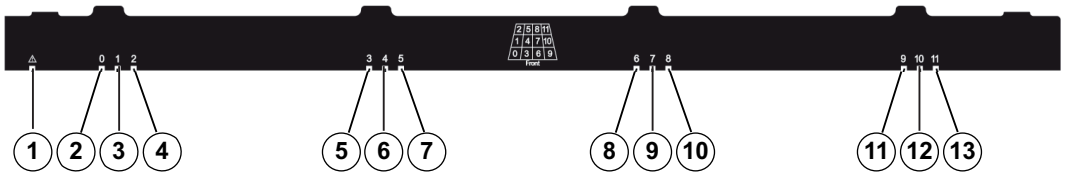


| | | | |
|---|---|---|---|
| **1** | Attention/Locate LED | **2-13** | Activity LEDs |

The following table describes the LEDs and their operational states:

| LED | Status indicator | Description |
|---|---|---|
| Attention/Locate LED | Amber | The drawer or a drive in the drawer requires operator attention. |
| | Off | The drawer and all drives in the drawer are operating normally. |
| | Blinking | A locate operation for a drive in the drawer is in progress. |
| Activity LEDs (for drives 0 through 11 in the drive drawer) | Green | The power is turned on and the drive is operating normally. |
| | Off | The power is turned off. |
| | Blinking | Drive I/O activity is taking place. |

Within a drive drawer, there are 12 drive slots numbered 0 through 11. Each drive uses an amber Attention LED that comes on if the drive requires operator attention

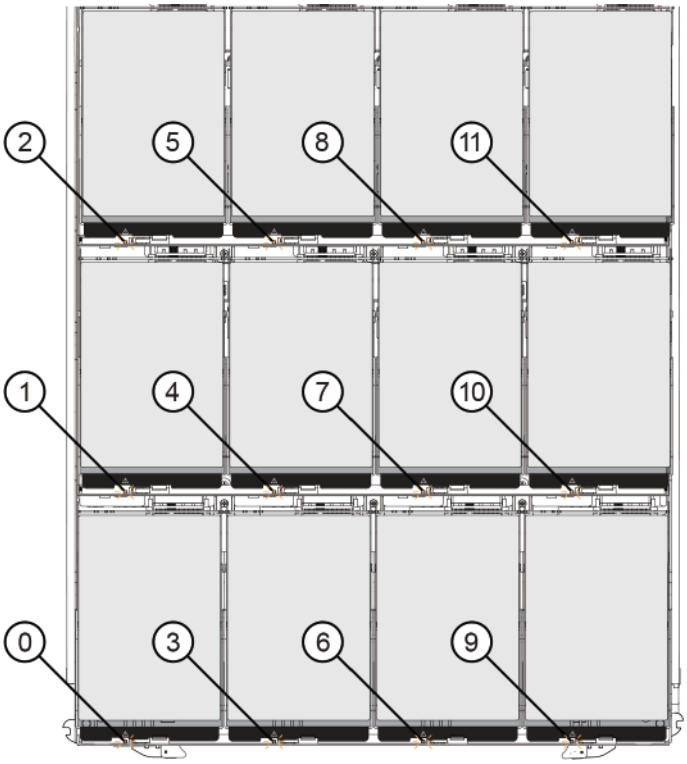

| | | | |
|---|---|---|---|
| **0** | Attention/Locate drive LED 0 | **1** | Attention/Locate drive LED 1 |
| **2** | Attention/Locate drive LED 2 | **3** | Attention/Locate drive LED 3 |
| **4** | Attention/Locate drive LED 4 | **5** | Attention/Locate drive LED 5 |
| **6** | Attention/Locate drive LED 6 | **7** | Attention/Locate drive LED 7 |
| **8** | Attention/Locate drive LED 8 | **9** | Attention/Locate drive LED 9 |
| **10** | Attention/Locate drive LED 10 | **11** | Attention/Locate drive LED 11 |

The LED status of the drives are indicated as follows:
- **Amber:** The drive in the drawer requires operator attention.
- **Off:** The drive in the drawer is operating normally.
- **Blinking:** A locate operation for the drive is in progress.

## 3.2.6 LEDs on the power canister

The power canister has LEDs and its own power switch and power outlet. Each 60-bay controller unit and 60-bay expansion unit contains two power canisters.

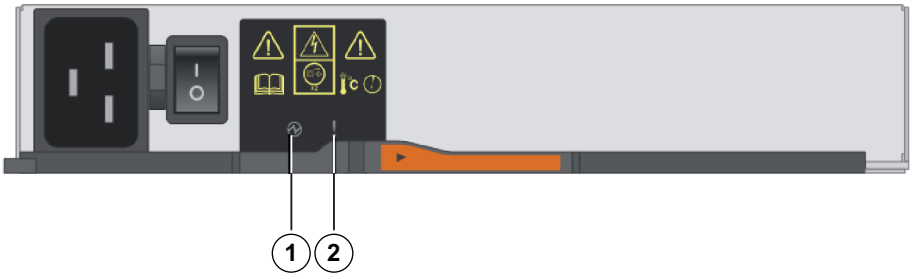


| | | | |
|---|---|---|---|
| **1** | Power LED | **2** | Attention LED |

The following table describes the LEDs and their operational states:

| LED icon | LED name | Status indicator | Description |
|---|---|---|---|
| | Power | Steady green | The power supply is functioning correctly. |
| | | Off | The power supply failed, the AC switch is turned off, the AC power cord is not properly installed, or the AC power cord input voltage is not within margin (there is a problem at the source end of the AC power cord). |
| ! | Attention | Steady amber | The power supply or its integrated fan has a fault. |

## 3.2.7 LEDs on the fan canister

The fan canister has an Attention LED that is identified by a sideways exclamation point in the middle of the canister. Each 60-bay controller unit and 60-expansion unit has two fan canisters, one on either side of the enclosure.

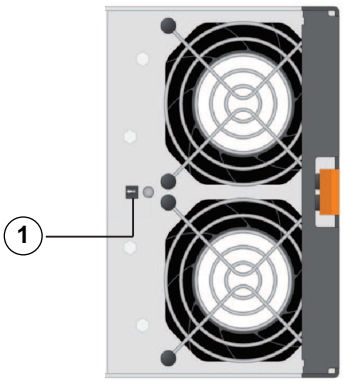


| | |
|---|---|
| **1** | Attention LED<br>Solid amber: The fan is faulty. |

# 4 Installation

## 4.1 Installing a 60-bay unit

You can install the unit in a four-post rack or system cabinet.
Observe the following:

- You can install the unit in either a square-hole or round-hole rack.
- If you are installing the unit in a cabinet not provided by Bosch:
  - Ensure that the rack is adequate for the weight and size of the unit to be installed.
  - Calculate the thermal output of your equipment and compare the results with the target system cabinet's thermal rating. You might need to remove the system cabinet doors to improve airflow through the system cabinet.
    For thermal rating information refer to the rack or system cabinet manuals provided by the manufacturer.
- You must use only the screws that are provided in the kit.

**Notice!**
When installing the units, load the cabinet so as not to make it top-heavy. One approach is to place the controller-unit in the middle portion of the cabinet while allowing room for expansion units to be placed above and below the controller unit.

To install a 60-bay controller unit or expansion unit:

1. If you are lifting and moving the unit by hand, attach the four handles. Push up on each handle until it clicks into place.

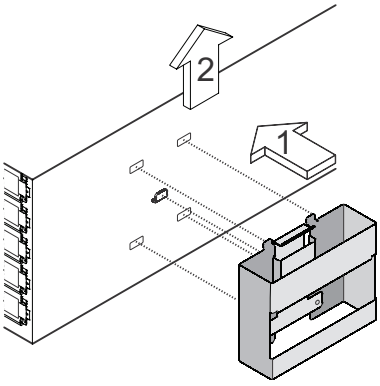


2. Place the back of the unit (the end with the connectors) on the rails.
   **Caution:** An empty unit weighs approximately 60 kg (132 lbs). Four persons are required to safely move an empty unit. A fully loaded unit weighs approximately 113 kg (250 lbs). A mechanical lift is required to safely move the unit.
3. Supporting the unit from the bottom, slide the unit into the cabinet. If you are using the handles, use the thumb latches to detach the handles as you slide the unit in.

4. Secure the unit to the front of the cabinet by inserting two screws in the 1st and 3rd holes (counting down from the top) on each side.

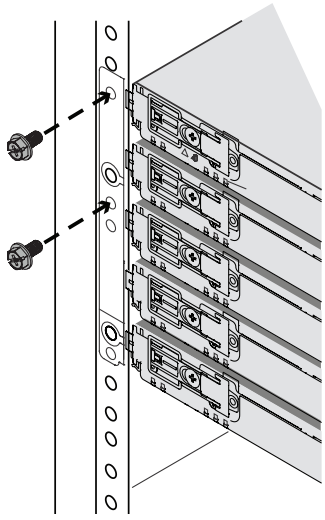

## 4.2 Installing a 60-bay unit with SuperRail

You can install the unit in a four-post rack or system cabinet.
Observe the following:

- You can install the unit in either a square-hole or round-hole rack.
- If you are installing the unit in a cabinet not provided by Bosch:
  - Ensure that the rack is adequate for the weight and size of the unit to be installed.
  - Calculate the thermal output of your equipment and compare the results with the target system cabinet's thermal rating. You might need to remove the system cabinet doors to improve airflow through the system cabinet.
    For thermal rating information refer to the rack or system cabinet manuals provided by the manufacturer.
- You must use only the screws that are provided in the kit.

**Notice!**
When installing the units, load the cabinet so as not to make it top-heavy. One approach is to place the controller-unit in the middle portion of the cabinet while allowing room for expansion units to be placed above and below the controller unit.

### 4.2.1 Installing SuperRail to square-hole four-post rack

Scope of delivery: SuperRail for square-hole four-post rack

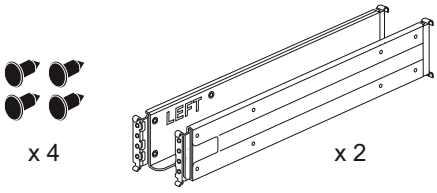


To install SuperRail to square-hole four-post rack:

1. Determine where you want to install the unit in the rack or system cabinet.
   **Note:** Whenever possible, install the units from the bottom of the rack up, so that you can use the units underneath as a guide for installing the next set of rails.
2. Attach the rails to the rack or system cabinet as follows:
   - Hook in the left rail in the adapter brackets and tighten all screws completely to hold the rail firmly in place.

– Repeat this step for the right rail.

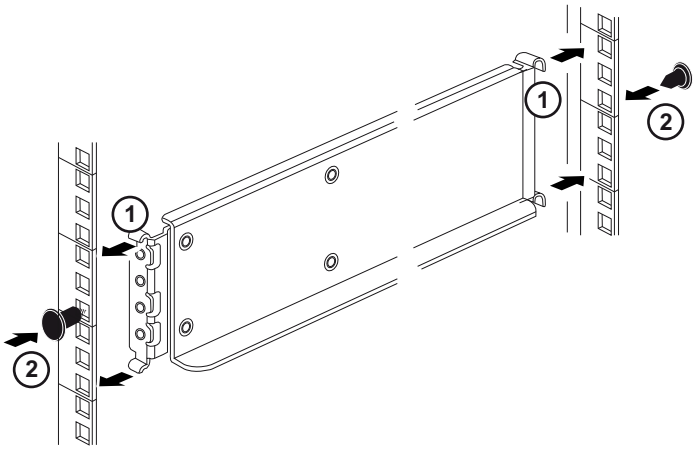


3. Place the back of the unit (the end with the connectors) on the rails.
**Caution:** An empty unit weighs approximately 60 kg (132 lbs). Four persons are required to safely move an empty unit. A fully loaded unit weighs approximately 113 kg (250 lbs). A mechanical lift is required to safely move the unit.

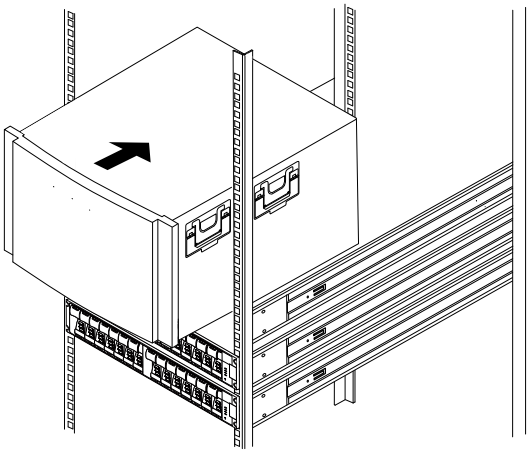

4. Carefully slide the unit all the way onto the rails.
**Note:** If applicable, you might need to remove the end caps or the system bezel to secure the unit to the rack post. Replace the system bezel when you are done.
**Note:** Do not place additional equipment on the rails after you finish installing the unit. The rails are not designed to bear additional weight.

5. For both front rail posts: Secure the unit to the front of the rack or system cabinet and rails by inserting the screws through the holes of the unit, the holes on the rack or system cabinet, and the holes on the front of rails.

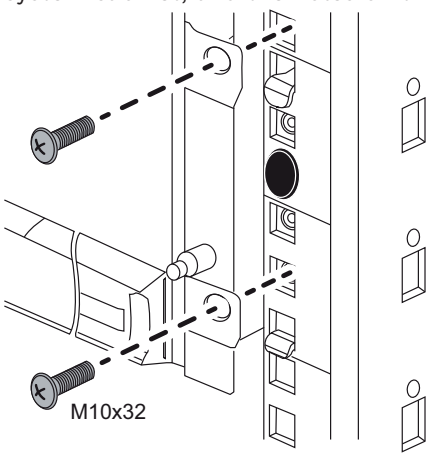


6. For both rear rail posts: Secure the unit to the rear of the rack or system cabinet and rails by inserting the screws through the hole of the unit, the hole on the rack or system cabinet, and the hole on the front of rails.

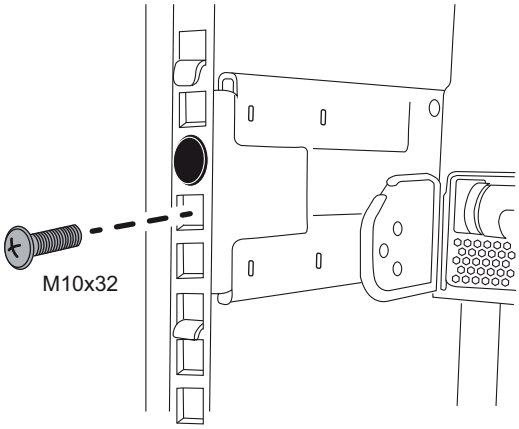


7. If applicable, replace the end caps or the system bezel.

### 4.2.2 Installing SuperRail to round-hole four-post rack

When installing SuperRail on a standard round-hole four-post rack you must use the 4 round-to-square hole adapter brackets.

Scope of delivery: SuperRail for round-hole four-post rack

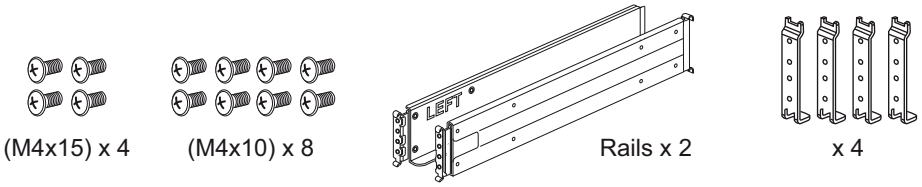


To install SuperRail to round-hole four-post rack:

1. Determine where you want to install the unit in the rack or system cabinet.
   **Note:** Whenever possible, install the units from the bottom of the rack up, so that you can use the units underneath as a guide for installing the next set of rails.

2. Tighten the round-to-square hole adapter brackets with the screws to the four rack posts.
   Leave enough room for the hook-piece of the rail between the rail adapters and the rack posts.

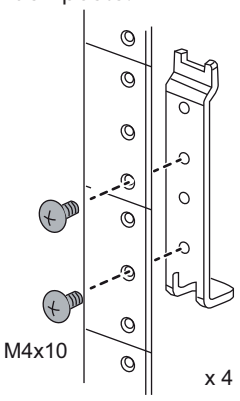


3. Attach the rails to the rack or system cabinet as follows:
   – Hook in the left rail in the adapter brackets and tighten all screws completely to hold the rail firmly in place.
   – Repeat this step for the right rail.

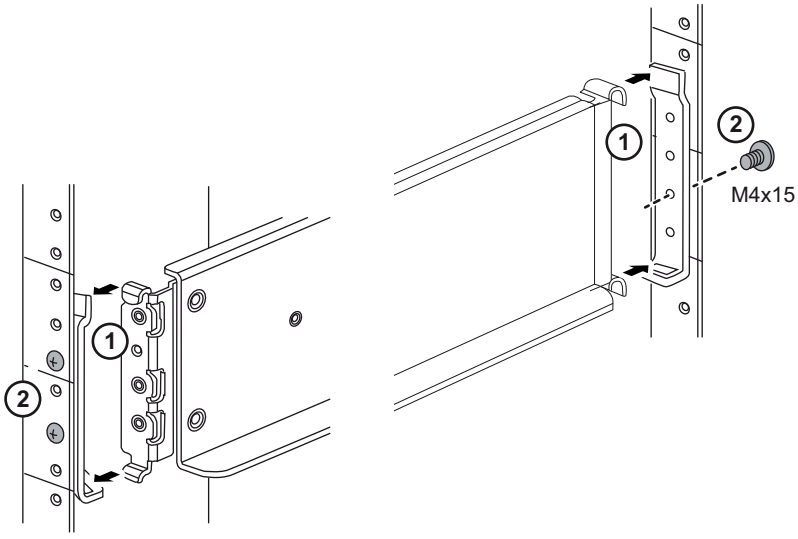


4. Place the back of the unit (the end with the connectors) on the rails.

**Caution:** An empty unit weighs approximately 60 kg (132 lbs). Four persons are required to safely move an empty unit. A fully loaded unit weighs approximately 113 kg (250 lbs). A mechanical lift is required to safely move the unit.

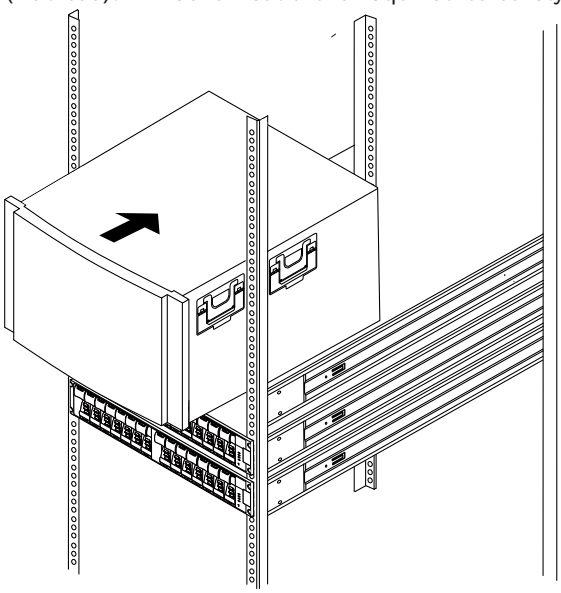

5. Carefully slide the unit all the way onto the rails.
   **Note:** If applicable, you might need to remove the end caps or the system bezel to secure the unit to the rack post. Replace the system bezel when you are done.
   **Note:** Do not place additional equipment on the rails after you finish installing the unit. The rails are not designed to bear additional weight.
6. For both front rail posts: Secure the unit to the front of the rack or system cabinet and rails by inserting the screws through the holes of the unit, the holes of the mounting brackets, the holes on the rack or system cabinet, and the holes on the front of rails.

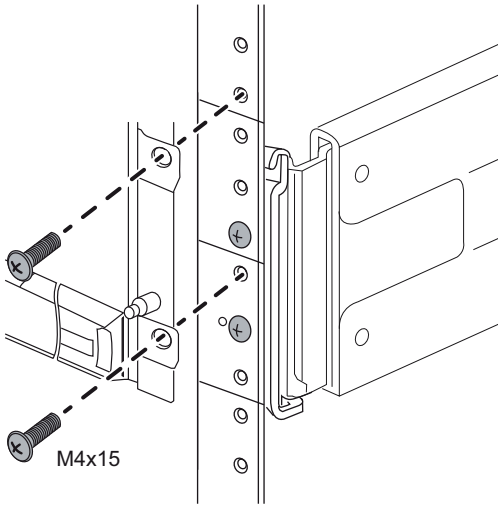


7. If applicable, replace the end caps or the system bezel.

## 4.3 Installing the drives

**Notice!**
To avoid damaging the hardware, never move a unit if drives are installed. Remove all drives before moving the unit.

To install the drives:

1. Put on the ESD wristband to protect the drives from static electricity.
2. Release the levers on the top drive drawer. Then, slide the drawer out by using the levers.
3. Raise the handle on the drive to vertical.

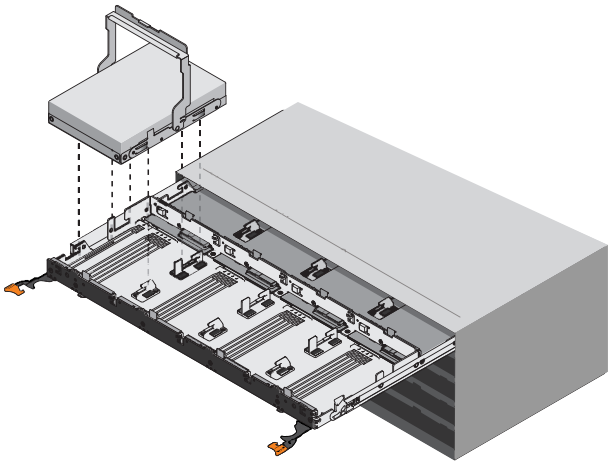

4. Starting with the leftmost slot at the front, align the two raised buttons on the drive with the notches on the drawer. Then, pressing gently on the top of the drive, rotate the drive handle down until the drive snaps into place.
5. Install the remaining drives. Observe the following if you are installing fewer than 60 drives, SSD drives or drives with different capacities:
   Install drives in the front four slots of each drawer (a minimum of 20 drives in each unit) to maintain adequate airflow for cooling.
   - Distribute any remaining drives across the drawers. If possible, install an equal number of each type of drive in each drawer to allow for the creation of Drawer Loss Protected volume groups or disk pools.
   - Distribute any SSD drives evenly across the drawers.
6. Slide the drawer back in by sliding it from the center and closing both levers gently.
7. Attach the bezel to the front of the unit.

## 4.4 Installing the front bezel and end caps

A front bezel covers the front of the controller unit and the expansion unit, while left and right end caps cover the mounting flanges on each unit.

To install the front bezel:

1. Position the front bezel in front of the controller unit or the expansion unit so that the holes at each end align with the fasteners on the unit.
2. Snap the bezel into place.

To install the end caps:

1. Position the left end cap in front of the controller unit or the expansion unit so that the holes in the end cap align with the fasteners on the left side of the unit.
2. Snap the end cap into place.

3. Repeat these steps for the right end cap.

## 4.5 Setting the unit ID using the ODP button

You can set or change the unit ID for a controller unit or a expansion unit by using the operator display panel (ODP) button.

**Before you begin**

You might need to remove the front bezel or the end cap to see the ODP button.

**About this procedure**

The following figure shows the operator display panel (ODP) button on the controller unit and the expansion unit.

| | |
|---|---|
| **1** | Operator display panel (ODP) button |

To set the unit ID with the ODP button:

1. Turn on the unit.
2. Press and hold the ODP button until the first number on the seven-segment display starts to blink.
   **Note:** It can take up to three seconds for the number to blink. If the number does not blink in this time, release the button and press it again. Make sure to press the button all the way in.
3. Change the first number of the unit ID by repeatedly pressing the ODP button to advance the number until you reach the desired number from 0 to 9.
   The first number continues to blink.
4. Press and hold the ODP button until the second number on the digital display starts to blink.
   **Note:** It can take up to three seconds for the second number to blink. The first number on the seven-segment display stops blinking.
5. Change the second number of the unit ID by repeatedly pressing the ODP button to advance the number until you reach the desired number from 0 to 9.
   The second number continues to blink.

6. Lock in the desired number, and exit the programming mode by pressing and holding the ODP button until the second number stops blinking.
   **Note:** It can take up to three seconds for the second number to stop blinking.

# 5 Connection

## 5.1 Connecting the expansion units

The expansion units are shipped with the appropriate number of SAS cables.
To connect the components:

- Connect the SAS cable from the SAS port on the controller unit to the SAS port on the expansion unit.

**One expansion unit - dual controller configuration**

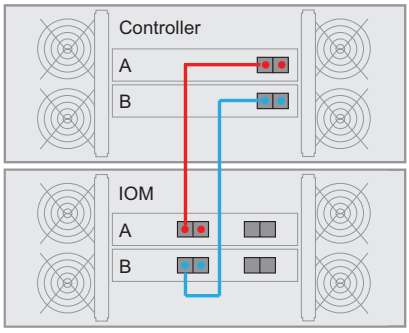


**Two expansion units - two controller configuration**

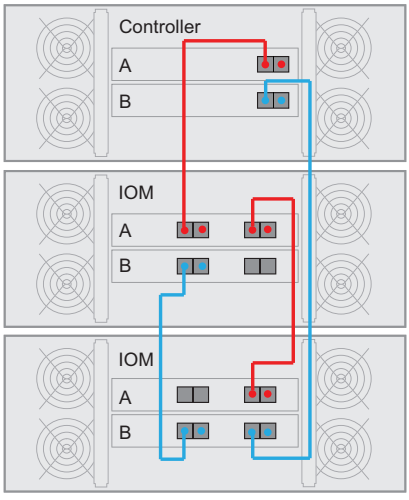


**Notice!**
You can connect a 60-bay DSA E2800 controller unit to a maximum of two 60-bay DSA E2800 expansion units.

## 5.2 Connecting the controller unit to the network

In case of a Bosch Video Recording Solution a host is an IP camera. To connect the controller unit to the Ethernet one or two of two available iSCSI host ports must be connected to the Ethernet. The iSCSI port connections will then be used by the IP cameras for video data traffic.
To connect the controller unit to the network:

- Connect the cable from the iSCSI host port of the controller unit to a port on the switch.
  **Note:** Make sure that the iSCSI ports of the controller unit and the relevant IP camera ports are in the same range on the switch.

**Switch topology**

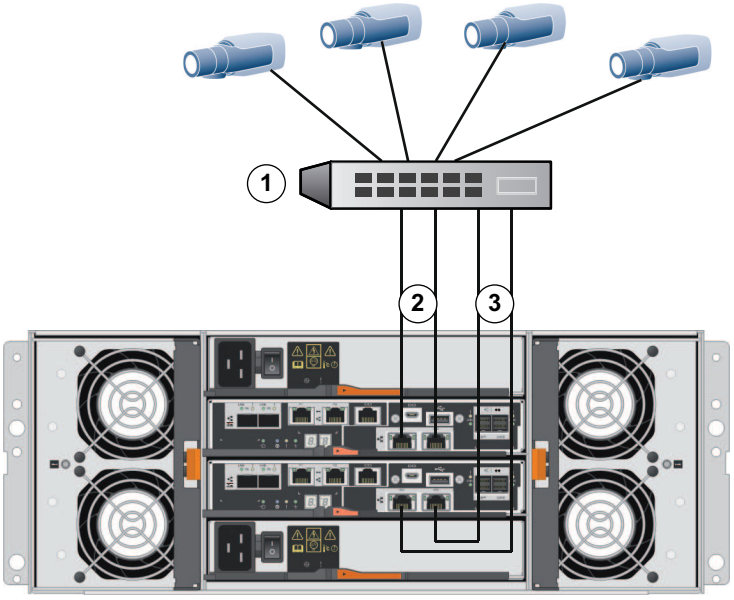


| | | | |
|---|---|---|---|
| **1** | Switch | **2** | Controller A - iSCSI host interface ports (RJ45 Base-T)<br>**Note:** Optionally, use the optical host interface ports. |
| **3** | Controller B - iSCSI host ports (RJ45 Base-T)<br>**Note:** Optionally, use the optical host interface ports. | | |

## 5.3 Connecting the controller unit to the management hosts

The management host directly manages storage arrays over an out-of-band network. This section describes how to set up an out-of-band connection between the Ethernet port of a controller unit and the management host.

To set up an out-of-band connection:

1. Connect Ethernet cables between port 1 of controller A and port 1 of controller B to an external Ethernet switch or hub.
2. Connect the management host to the Ethernet switch or hub.

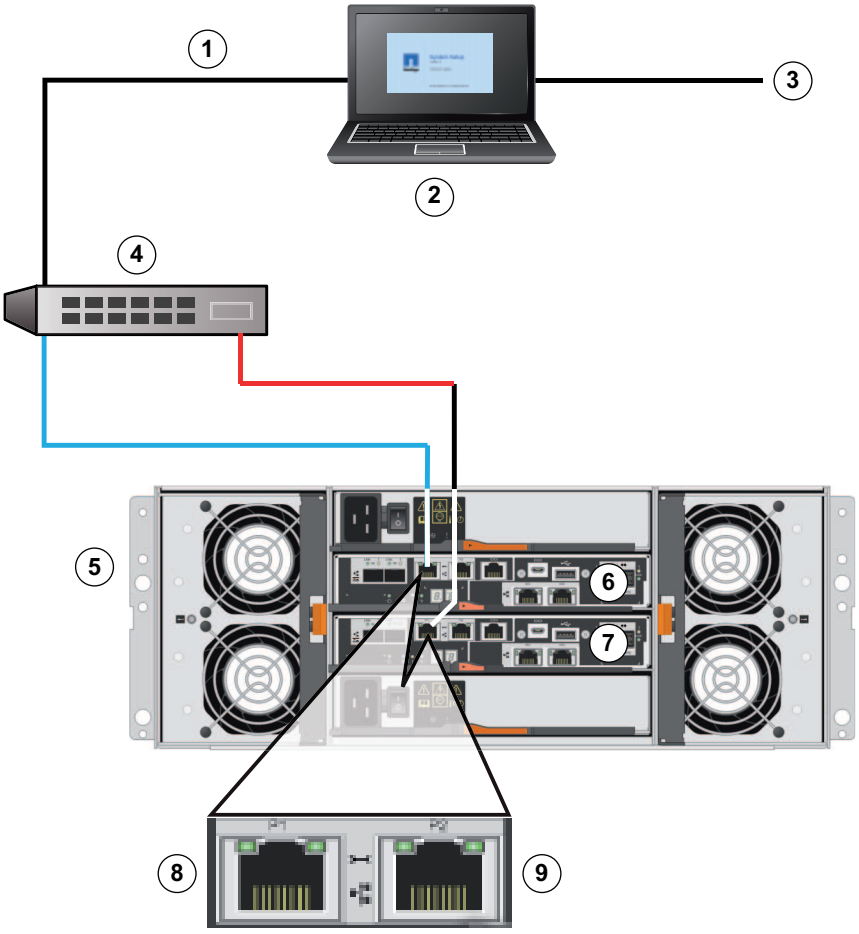


| | | | |
|---|---|---|---|
| **1** | Private network | **2** | Management station or personal computer |
| **3** | Local Area Network (LAN) | **4** | Switch or hub |
| **5** | Dual controller unit | **6** | Controller A |
| **7** | Controller B | **8** | Management port 1 (Ethernet)<br>**Note:** Used as default. |
| **9** | Management port 2 (Ethernet)<br>**Note:** Reserved for maintenance operations if the hardware contains a second Ethernet port. | | |

**Notice!**
Ethernet port 2 should be reserved for maintenance operations if your hardware contains a second Ethernet port.

## 5.4 Connecting the units to the power supply

To connect the controller unit and the expansion units to the power supply:

1. Confirm that the two power switches on the controller unit are off.
   **Note:** If you have expansion units, confirm that their power switches are off.

2. Connect the two power cords of the controller unit to different power distribution units in the cabinet or rack.
   **Note:** If you have expansion units, connect the two cords accordingly.

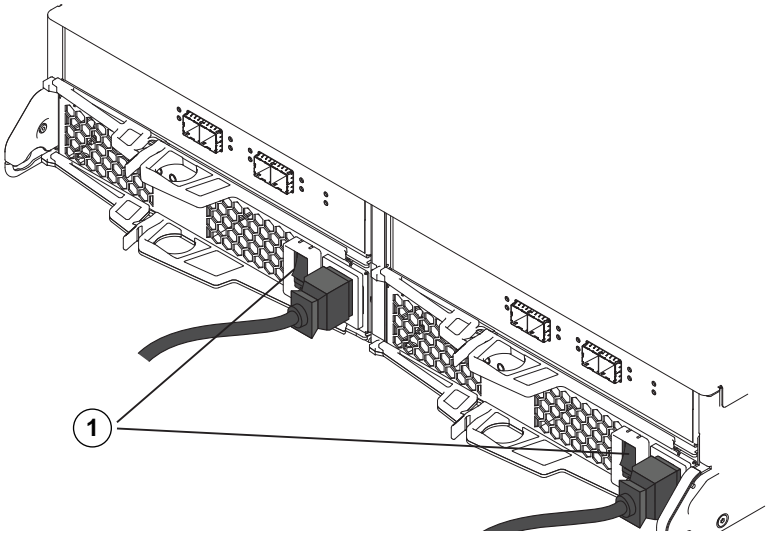


   1 = Power switch
3. If you have expansion units, turn on their two power switches first.
   **Note:** Wait for 2 minutes to allow hard disks to spin up before applying power to the controller unit.
4. Turn on the two power switches on the controller unit and wait approximately 3 minutes.
   **Note:**
   – The default IP addresses will take approximately 3 minutes to initialize from the time the network is attached.
   – Do not turn off the power switches during the power-on process.
   – The fans are very loud when they first start up. The loud noise during start-up is normal.
5. Check the LEDs and the seven-segment display on the back of each controller.
   **Note:** The seven-segment display shows a repeating sequence (OS, Sd, blank) to indicate that the controller is performing start-of-day processing. After the controller has started, the display shows the tray ID.
6. If any of the amber LEDs are on, there might be a problem with a component. Confirm you completed the installation steps correctly. If you are unable to resolve the problem, contact your local Bosch Technical Support team.

## 5.5 Supported connections

We recommend using the following connection methods:

| | Default | Alternatively |
|---|---|---|
| Controller A<br>Controller B | 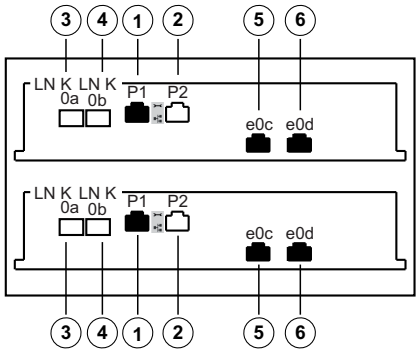 | 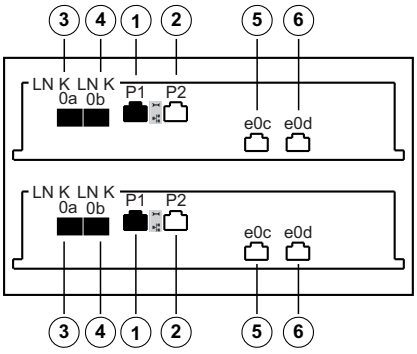 |

| | | | |
|---|---|---|---|
| **1** | Management port 1 (Ethernet)<br>**Note:** Used as default. | **2** | Management port 2 (Ethernet)<br>**Note:** Reserved for maintenance operations if the hardware contains a second Ethernet port. |
| **3** | Channel 3 / Controller A and Channel 3 / Controller B (iSCSI, optical) | **4** | Channel 4 / Controller A and Channel 4 / Controller B (iSCSI, optical) |
| **5** | Channel 5 / Controller A and Channel 5 / Controller B (iSCSI, RJ45 Base-T) | **6** | Channel 6 / Controller A and Channel 6 / Controller B (iSCSI, RJ45 Base-T) |

The Multipathing feature is enabled on dual controller units by default.
Dual controller units support 2 different cabling options for the iSCSI ports.

- Default: iSCSI, RJ45 Base-T
  **Note:**
  - Channel 5 / Controller B is the fallback of Channel 5 / Controller A and Channel 6 / Controller A is the fallback of Channel 6 /. Controller B
- Alternatively: iSCSI, optical
  **Note:**
  - Channel 3 / Controller B is the fallback of Channel 3 / Controller A and Channel 4 / Controller A is the fallback of Channel 4 /. Controller B

# 6 Turning on/off AC power

## 6.1 Turning on AC power

Make sure the Ethernet cable is connected to the management host. The default IP addresses will take three minutes to initialize from the time the network is attached.
The default IP addresses for controllers running on software 11.60 or earlier are:
- Controller A, Port 1: 192.168.128.101
- Controller B, Port 1: 192.168.128.102

The default IP addresses for controllers running on software 11.60.2 or later are:
- Controller A, Port 1: 169.254.128.101
- Controller B, Port 1: 169.254.128.102

**Notice!**
DHCP is attempted for the first three minutes of attaching the network cables. If a DHCP lease was not offered within this time, the controllers will use the default addresses.

To turn on power to the controller unit or the expansion units:
1. Connect the cabinet to the power supply.
2. Turn on the power distribution units of the cabinet.
3. If you have expansion units, turn on their two power switches first.
   **Note:** Wait for 2 minutes to allow hard disks to spin up before applying power to the controller unit.
4. Turn on the two power switches on the controller unit and wait approximately 3 minutes.
   **Note:**
   - The default IP addresses will take approximately 3 minutes to initialize from the time the network is attached.
   - Do not turn off the power switches during the power-on process.
   - The fans are very loud when they first start up. The loud noise during start-up is normal.
5. Check the LEDs and the seven-segment display on the back of each controller.
   **Note:** The seven-segment display shows a repeating sequence (OS, Sd, blank) to indicate that the controller is performing start-of-day processing. After the controller has started, the display shows the tray ID.
6. If any of the amber LEDs are on, there might be a problem with a component. Confirm you completed the installation steps correctly. If you are unable to resolve the problem, contact your local Bosch Technical Support team.
7. Connect all cables if required.
8. Start recording of the cameras.

## 6.2 Turning off AC power

We recommend turning off the system when moving the system to another location and upgrading or replacing the hardware, for example.
To turn off power to the controller unit or the expansion units:
1. Stop recording of the cameras and wait for 5 minutes.
2. Ensure there are no background operations in progress.
3. Turn off the controller-unit and wait that all LEDs are off.
4. Turn off the expansion units and wait for 2 minutes to allow hard disks to spin down.

5. Disconnect the cables if required.

# 7 Configuring the storage system

This chapter describes the basic configuration of the storage system using the Configuration Manager program.

To get a basic configuration, do the following steps:

1. Start the Configuration Manager program.
2. Add the device to the system.
3. Create a basic configuration.

**Starting the Configuration Manager program**

To start the Configuration Manager program:

- Double-click the the Configuration Manager icon on the desktop.

**Adding the device to the system**

To add iSCSI devices to the system:

1. On the navigation bar, click the **Network Scan** tab.
   **Note:** The Configuration Manager program scans the network for compatible devices and displays the decoder in the tree structure.
2. In the tree structure, right-click a device, then click **Add to System...**.
   The **Add Device to System** dialog box appears.
3. Enter the name of the group or select the name from the list if you want to assign the device to a group.
   **Note:** You can also continue without selecting or creating a group.
4. Click **OK**.
   The device is added to the system.
5. Click the **My Devices** tab to display the device in the tree structure.

**Creating a basic configuration**

To create a basic configuration:

1. On the navigation bar, click the **My Devices** tab.
2. In the tree structure, click the corresponding device, click **Pool x**, click **Storage Systems**, then click the storage system.
3. In the view pane, click the **Basic configuration** tab. The basic configuration settings of the storage system appear.
4. Enter the basic settings of your storage system.
5. Click **Initialize**. An information message box appears.
6. Click **Yes** to confirm that you want to go on with the basic configuration. The **Basic Configuration for the iSCSI system** dialog box appears.
   **Note:** The dialog box shows the status of the configuration process.
7. Click the **Status** tab to display the status of the configuration process.
   Click the **Details** tab to display details about all processes.
   Click **Close** to close the dialog box.
8. Click the **Reload** icon.
9. In the tree structure, right-click the storage system, then click **LUN Assignment...**. The **LUN Assignment** dialog box appears.
   **Note:** If multiple iSCSI ports are used, distribute the LUNs equally among the logical iSCSI targets. Do not assign one LUN to multiple logical iSCSI targets.

10. Drag the **Target x** folder from the left side (**Source**) to the right side (**VRM System**), then click **OK**.
11. In the device tree, below the storage system, click **Target x**.
    In the **LUNs** pane to the right, all assigned LUNs appear with the status **Unformatted**.
12. In the **LUNs** pane, click **Select All**, then click **Set**. The LUNs appear with the status **Task format** and a warning message box appears that informs you that formatting a disk will delete all data.
13. Click **Yes** to confirm. The status of the LUNs changes to **Ready**. The LUNs are formatted.

# 8 Maintenance

## 8.1 Replacing a drive in a 60-bay unit

The Recovery Guru in SANtricity System Manager monitors the drives in the unit and can notify you of an impending drive failure or an actual drive failure. When a drive has failed, its amber Attention LED is on. You can hot-swap a failed drive while the unit is receiving I/O operations.

**Before you begin**

- You have a replacement drive that is supported by Bosch for the controller unit or expansion unit.
- You have an ESD wristband, or you have taken other antistatic precautions.

**About this procedure**

Use this procedure to replace a drive in the following controller units or expansion units:

| Type | Number of drives | Type of drives |
|---|---|---|
| 60-bay controller unit | 60 | 3.5-inch SAS drives in carriers or 2.5-inch SAS drives in carriers |
| 60-bay expansion unit | 60 | |

The 60-bay controller unit and the 60-bay expansion unit consist of 5 drive drawers that each contain 12 drive slots. Drive drawer 1 is at the top, and drive drawer 5 is at the bottom. The drives are numbered from 0 to 11 in each drive drawer.

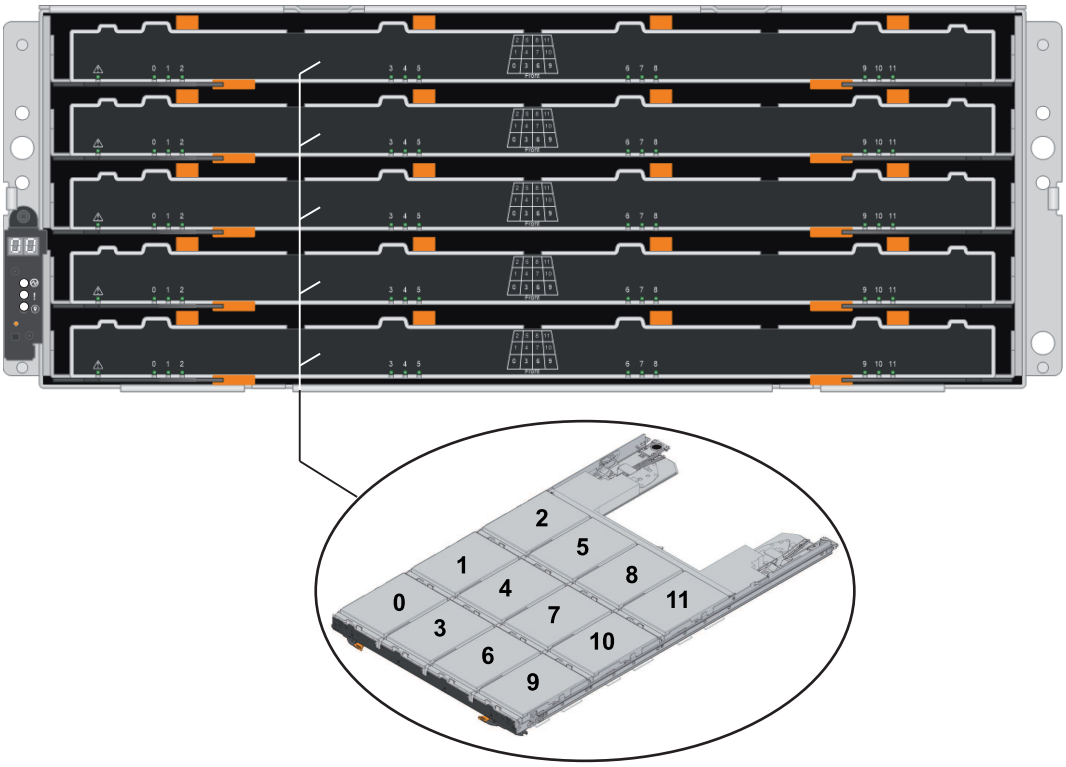


**Rules for handling drives**

The drives are fragile. Improper drive handling is a leading cause of drive failure. Follow these rules to avoid damaging the drives in your unit:

- Prevent electrostatic discharge (ESD)
  - Keep the drive in the ESD bag until you are ready to install it.

  - Do not insert a metal tool or knife into the ESD bag. Open the ESD bag by hand or cut the top off with a pair of scissors.
  - Keep the ESD bag and any packing materials in case you must return a drive later.
  - Always wear an ESD wrist strap grounded to an unpainted surface on your storage enclosure chassis. If a wrist strap is unavailable, touch an unpainted surface on your storage enclosure chassis before handling the drive.
- Handle drives carefully
  - Always use two hands when removing, installing, or carrying a drive.
  - Never force a drive into a unit. Use gentle, firm pressure to completely engage the drive latch.
  - Place drives on cushioned surfaces, and never stack drives on top of each other.
  - Do not bump drives against other surfaces.
  - Before removing a drive, unlatch the handle and wait 30 seconds for the drive to spin down.
  - Always use approved packaging when shipping drives.
- Avoid magnetic fields
  - Keep drives away from magnetic devices. Magnetic fields can destroy all data on the drive and cause irreparable damage to the drive circuitry.

To replace a drive observe the instructions in the following chapters:

1. *Preparing to replace a drive, page 39*
2. *Removing a drive, page 40*
3. *Installing a drive, page 41*
4. *After replacing a drive, page 42*

### 8.1.1 Preparing to replace a drive

Before replacing a drive, check the Recovery Guru in SANtricity System Manager and complete any prerequisite steps. Then, you can locate the failed drive.

To locate the failed drive:

1. If the Recovery Guru in SANtricity System Manager has notified you of an impending drive failure, but the drive has not yet failed, follow the instructions in the Recovery Guru to fail the drive.
2. If needed, use SANtricity System Manager to confirm you have a suitable replacement drive.
   - Select **Hardware**.
   - Select the failed drive on the unit graphic.
   - Click the drive to display the context menu, then select **View settings**.
   - Confirm that the replacement drive has a capacity equal to or greater than the drive you are replacing and that it has the features you expect.
     For example, do not attempt to replace a hard disk drive (HDD) with a solid-state disk (SSD). Similarly, if you are replacing a secure-capable drive, make sure the replacement drive is also secure-capable.
3. If needed, use SANtricity System Manager to locate the drive within the unit.
   - If the unit has a bezel, remove it so you can see the LEDs.
   - From the drive's context menu, select **Turn on locator light**.
     The drive drawer's amber Attention LED blinks so you can open the correct drive drawer to identify which drive to replace.
     **Note:** The drive drawer Attention LEDs are on the left side in front of each drive,

with an attention icon on the drive handle just behind the LED.

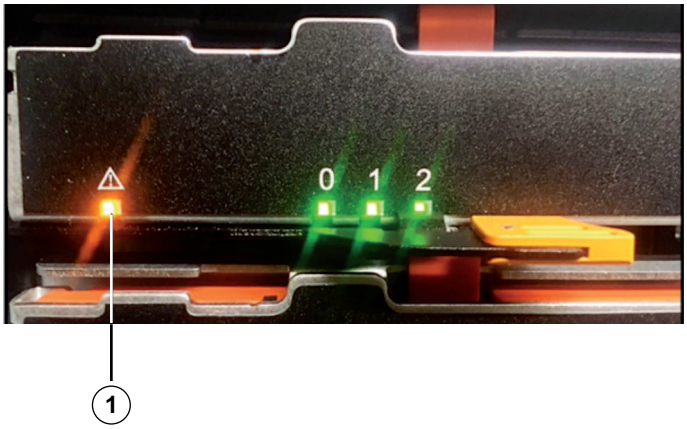


1 = Attention LED on drive drawer

- Unlatch the drive drawer by pulling on both levers.
- Using the extended levers, carefully pull the drive drawer out until it stops.
- Look at the top of the drive drawer to find the Attention LED in front of each drive.

1 = Attention LED light on for the drive on the top right side.

## 8.1.2 Removing a drive

When removing a drive from a 60-bay controller unit or a 60-bay expansion unit, you must lift the drive partly out of the drawer and wait for the drive to spin down. Then, you can remove the drive completely.

Before you begin:

- You have an ESD wristband, or you have taken other antistatic precautions.
- You have reviewed the *Rules for handling drives, page 38*.

To remove a drive:

1. Unpack the replacement drive, and set it on a flat, static-free surface near the unit. Save all packing materials for the next time you need to send a drive back.
2. If you have not already done so, release the drive drawer levers from the center of the appropriate drive drawer by pulling both towards the sides of the drawer.
3. If you have not already done so, carefully pull on the extended drive drawer levers to pull out the drive drawer to its full extension without removing it from the enclosure.

4. Gently pull back the orange release latch that is in front of the drive you want to remove.
   The cam handle on the drive springs open partially, and the drive is released from the drawer.

   1 = Orange release latch
5. Open the cam handle, and lift out the drive slightly.
6. Wait 30 seconds.
7. Use the cam handle to lift the drive from the unit.

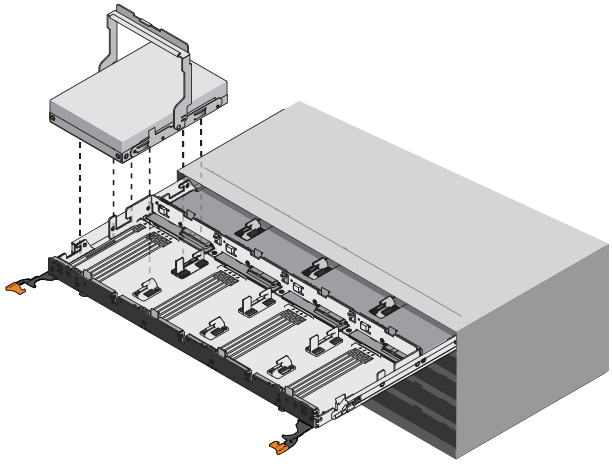

8. Place the drive on an antistatic, cushioned surface away from magnetic fields.
9. Wait 30 seconds for the software to recognize that the drive has been removed.

**Notice!**
If you accidentally remove an active drive, wait at least 30 seconds, and then reinstall it. For the recovery procedure, refer to the storage management software.

### 8.1.3 Installing a drive

Install the replacement drive as soon as possible after removing the failed drive. Otherwise, there is a risk that the equipment might overheat.

To install a drive:

1. Raise the cam handle on the new drive to vertical.

2. Align the two raised buttons on each side of the drive carrier with the matching gap in the drive channel on the drive drawer.

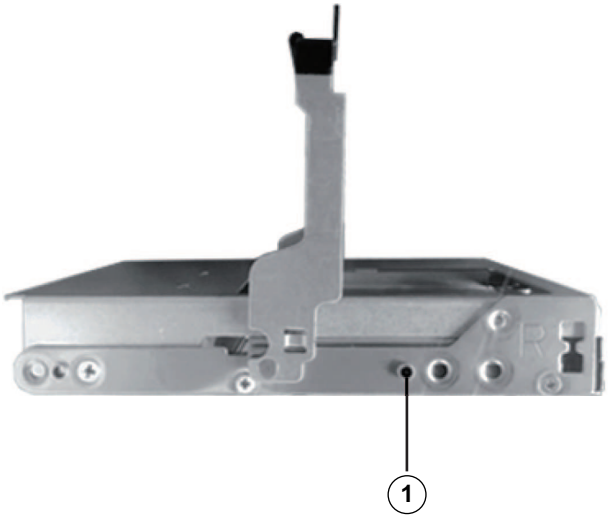


1 = Raised button on the right side of the drive carrier

3. Lower the drive straight down, and then rotate the cam handle down until the drive snaps into place under the orange release latch.
4. Carefully push the drive drawer back into the unit.

**Note:** Possible loss of data access: Never slam the drawer shut. Push the drawer in slowly to avoid jarring the drawer and causing damage to the unit.

5. Close the drive drawer by pushing both levers towards the center.
   The green Activity LED for the replaced drive on the front of the drive drawer comes on when the drive is inserted correctly.
   **Note:** Depending on your configuration, the controller might automatically reconstruct data to the new drive. If the unit uses hot spare drives, the controller might need to perform a complete reconstruction on the hot spare before it can copy the data to the replaced drive. This reconstruction process increases the time that is required to complete this procedure.

### 8.1.4 After replacing a drive

After replacing a drive, you must confirm that the new drive is working correctly.
To confirm that the new drive is working correctly:

1. Check the Activity LED and the Attention LED on the drive you replaced.

| LED status | Description |
|---|---|
| The Activity LED is on or blinking, and the Attention LED is off. | The new drive is working correctly. |
| The Activity LED is off. | The drive might not be installed correctly. Remove the drive, wait 30 seconds, and then reinstall it. |
| The drive drawer's Attention LED is on. | The new drive might be defective. Replace it with another new drive. |

| LED status | Description |
|---|---|
| | **Note:** When you first insert a drive, its Attention LED might be on. However, the LED should go off within a minute. |

2. If the Recovery Guru in SANtricity System Manager still shows an issue, select **Recheck** to ensure the problem has been resolved.
3. If the Recovery Guru indicates that drive reconstruction did not start automatically, start reconstruction manually, as follows:
   **Note:** Perform this operation only when instructed to do so by technical support or the Recovery Guru.
   – Select **Hardware**.
   – Click the drive that you replaced.
   – From the drive's context menu, select **Reconstruct**.
   – Confirm that you want to perform this operation.
   When the drive reconstruction completes, the volume group is in an optimal state.
4. As required, reinstall the bezel on the front of the unit.
5. Return the failed part to Bosch, as described in the RMA instructions shipped with the kit.

## 8.2 Replacing a power canister

Each 60-bay controller unit or 60-bay expansion unit includes 2 power canisters for power redundancy. If a power canister fails, replace the power canister as soon as possible to ensure that the unit has a redundant power source.

**Before you begin**

– You have a replacement power canister that is supported for your controller unit or expansion unit model.
– You have one power canister that is installed and running.
– You have an ESD wristband, or you have taken other antistatic precautions.

**About this procedure**

Use this procedure to replace a power canister in the following units:

– 60-bay E2800 controller unit
– 60-bay E2800 expansion unit

**Rear view - 60-bay controller unit (left) / 60-bay expansion unit (right)**

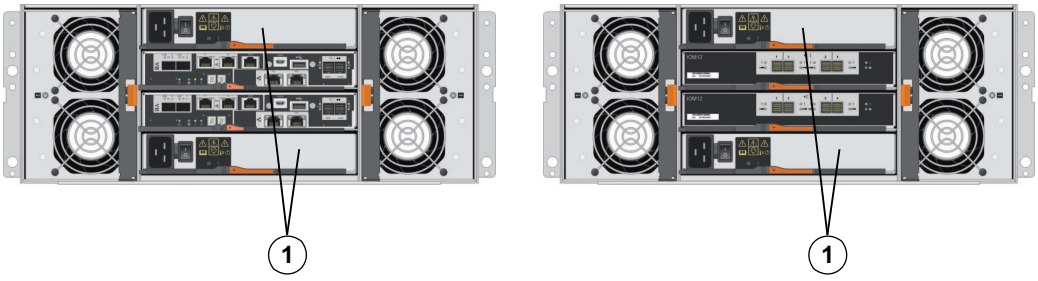


| | |
|---|---|
| **1** | Power canister |

You can replace a power canister while your storage array is powered on and performing host I/O operations, as long as the following conditions are true:

– The other power canister in the unit has Optimal status.
  **Note:** While you perform the procedure, the second power canister supplies power to both fans to ensure that the equipment does not overheat.

– The **OK to remove** field in the **Details** area of the Recovery Guru in SANtricity System Manager displays **Yes**, indicating that it is safe to remove this component.

**Notice!**
If the second power canister in the unit does not have Optimal status or if the Recovery Guru indicates that it is not OK to remove the power canister, contact your technical support..

To replace a power canister observe the instructions in the following chapters:
1. *Preparing to remove a power canister, page 44*
2. *Removing a power canister, page 45*
3. *Installing a power canister, page 45*
4. *After replacing a power canister, page 45*

## 8.2.1 Preparing to remove a power canister

Before you remove a power canister, use SANtricity System Manager to collect support data about your storage system and to locate the failed component.
You can determine whether you have a failed power canister in these ways:
– The Recovery Guru in SANtricity System Manager directs you to replace a failed power canister. Before replacing a power canister, select **Recheck** from the Recovery Guru to ensure that no other items must be addressed first.
– The amber Attention LED on the power canister is on, indicating that the component is faulty.
  **Note:** If both power canisters in the shelf have their Attention LEDs on, contact technical support for assistance.

To prepare the removing of the component:
1. Collect support data for your storage system (see *Collecting support data for the storage system, page 53*).
   **Note:** Collecting support data before and after replacing a component ensures you can send a full set of logs to technical support in case the replacement does not resolve the problem.
2. From SANtricity System Manager, determine which power canister has failed.
   – Select **Hardware**.
   – Look at the power icon to the right of the **Shelf** lists to determine which shelf has the failed power canister. If a component has failed, this icon will be red.
   – When you find the shelf with a red icon, select **Show back of shelf**.
   – Select either power canister or the red power icon.
   – On the **Power Supplies** tab, look at the statuses of the power canisters to determine which power canister must be replaced. A component with a **Failed** status must be replaced.
     **Note:** If the second power canister in the shelf does not have **Optimal** status, do not attempt to hot-swap the failed power canister. Instead, contact technical support for assistance.
     You can also find information about the failed power canister in the Details area of the Recovery Guru, or you can review the information displayed for the shelf, or you can review the Event Log under Support and filter by Component Type.

3. From the back of the storage array, look at the Attention LEDs to locate the power canister you need to remove. You must replace the power canister that has its Attention LED on.

**Refer to**

– *LEDs on the power canister, page 18*

### 8.2.2 Removing a power canister

To remove a power canister:

1. Put on antistatic protection.
2. Unpack the new power canister and place it on a level surface near the unit.
   Save all packing materials for use when returning the failed power canister.
3. Turn off the power switch on the power canister that you need to remove.
4. Open the power cord retainer of the power canister that you need to remove, then unplug the power cord from the power canister.
5. Press the orange latch on the power canister cam handle, then open the cam handle to fully release the power canister from the mid plane.
6. Use the cam handle to slide the power canister out of the unit.
   **Note:** When removing a power canister, always use two hands to support its weight.

### 8.2.3 Installing a power canister

To install a power canister:

1. Make sure that the on/off switch of the new power canister is in the Off position.
2. Using both hands, support and align the edges of the power canister with the opening in the system chassis, then gently push the power canister into the chassis using the cam handle until it locks into place.
   **Note:** Do not use excessive force when sliding the power canister into the chassis; you can damage the connector.
3. Close the cam handle so that the latch clicks into the locked position and the power canister is fully seated.
4. Reconnect the power cord to the power canister, and secure the power cord to the power canister using the power cord retainer.
5. Turn on the power to the new power canister.

### 8.2.4 After replacing a power canister

After replacing a power canister, you must confirm that the new power canister is working correctly. Then, you can gather support data and resume operations.

To confirm that the new power canister is working correctly:

1. Check the green Power LED and the amber Attention LED on the new power canister. The Power LED must be on and the Attention LED must be off (see *LEDs on the power canister, page 18*).
2. From the Recovery Guru in SANtricity System Manager, select **Recheck** to ensure the problem has been resolved.
3. If a failed power canister is still being reported, repeat the steps in *Removing a power canister, page 45* and *Installing a power canister, page 45*. If the problem continues to persist, contact technical support.

4. Remove the antistatic protection.
5. Collect support data for your storage system (see *Collecting support data for the storage system, page 53*).
   **Note:** Collecting support data before and after replacing a component ensures you can send a full set of logs to technical support in case the replacement does not resolve the problem.
6. Return the failed part as described in the RMA instructions shipped with the kit.

## 8.3 Replacing a fan canister

Each 60-bay controller unit or 60-bay expansion unit includes two fan canisters. If a fan canister fails, you, replace the fan canister as soon as possible to ensure that the unit has adequate cooling.

**Before you begin**

- You have a replacement fan canister (fan) that is supported for your controller unit or expansion unit model.
- You have one fan canister that is installed and running.
- You have an ESD wristband, or you have taken other antistatic precautions.

**About this procedure**

Use this procedure to replace a fan canister in the following units:

- 60-bay E2800 controller unit
- 60-bay E2800 expansion unit

**Notice!**
Possible equipment damage - If you perform this procedure with the power turned on, you must complete it within 30 minutes to prevent the possibility of overheating the equipment.

**Rear view - 60-bay controller unit (left) / 60-bay expansion unit**

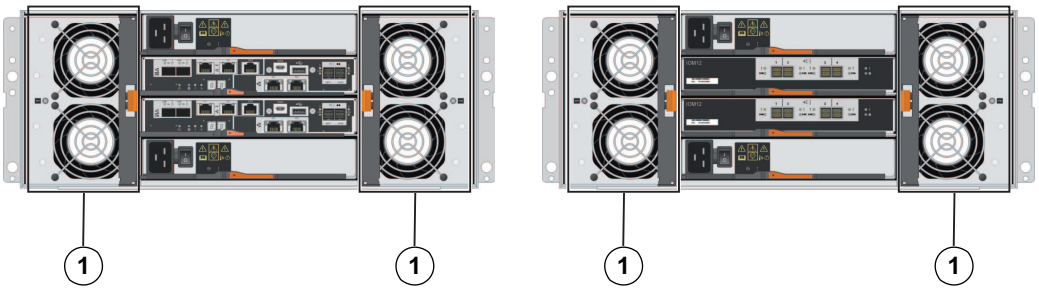


| | |
|---|---|
| 1 | Fan canister |

You can replace a fan canister while your storage array is turned on and performing host I/O operations, as long as the following conditions are true:

- The other fan canister in the unit has Optimal status.
- The **OK to remove** field in the **Details** area of the Recovery Guru in SANtricity System Manager displays **Yes**, indicating that it is safe to remove this component.

**Notice!**
If the second fan canister in the unit does not have Optimal status or if the Recovery Guru indicates that it is not OK to remove the fan canister, contact your technical support.

To replace a fan canister observe the instructions in the following chapters:

1. *Preparing to remove a fan canister, page 47*
2. *Removing and replacing a fan canister, page 48*
3. *After replacing a fan canister, page 48*

## 8.3.1 Preparing to remove a fan canister

Before removing a fan canister, use SANtricity System Manager to collect support data about your storage system and to locate the failed component.

You can determine whether you have a failed fan canister in these ways.

- The Recovery Guru in SANtricity System Manager directs you to replace a failed fan canister.

  **Note:** Before replacing a fan canister, select **Recheck** from the Recovery Guru to ensure that no other items must be addressed first.
- The amber Attention LED on the fan canister is on, indicating that the fan is faulty.

  **Note:** If both fan canisters in the unit have their Attention LEDs on, contact technical support for assistance.

To prepare the removing of the component:

1. Collect support data for your storage system (see *Collecting support data for the storage system, page 53*).

   **Note:** Collecting support data before and after replacing a component ensures you can send a full set of logs to technical support in case the replacement does not resolve the problem.
2. From SANtricity System Manager, determine which fan canister has failed.
   - Select **Hardware**.
   - Look at the fan icon to the right of the **Shelf** lists to determine which shelf has the failed fan canister. If a component has failed, this icon is red.
   - When you find the shelf with a red icon, select **Show back of shelf**.
   - Select either fan canister or the red fan icon.
   - On the **Fans** tab, look at the statuses of the fan canisters to determine which fan canister must be replaced. A component with a **Failed** status must be replaced.

     **Note:** If the second fan canister in the shelf does not have **Optimal** status, do not attempt to hot-swap the failed fan canister. Instead, contact technical support for assistance.

     You can also find information about the failed fan canister in the Details area of the Recovery Guru, or you can review the Event Log under Support and filter by Component Type.
3. From the back of the storage array, look at the Attention LEDs to locate the fan canister you need to remove. You must replace the fan canister that has its Attention LED on.

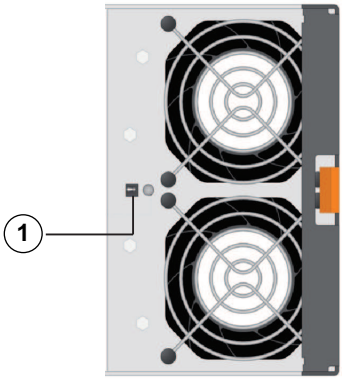

| | |
|---|---|
| 1 | Attention LED<br>Solid amber: The fan is faulty. |

## 8.3.2 Removing and replacing a fan canister

When you remove the failed fan canister, you do not have to turn off power to your storage array. You must ensure that you remove and replace the fan canister within 30 minutes to prevent the system from overheating.

To remove and replace a fan canister:

1. Put on antistatic protection.
2. Unpack the new fan canister, and place it on a level surface near the unit.
   Save all packing material for use when returning the failed fan.
3. Press the orange release button to release the fan canister handle.

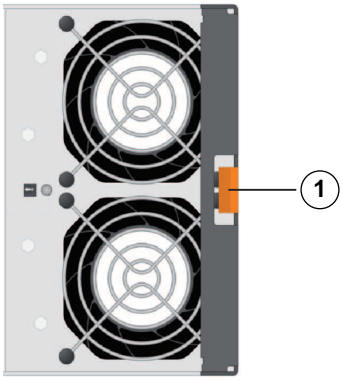


1 = Release button

4. Use the fan canister handle to pull the fan canister out of the unit.

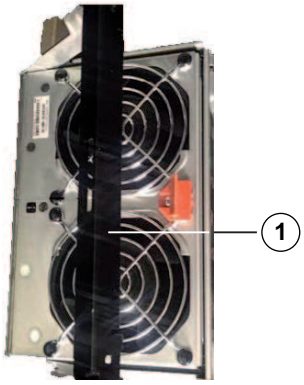


1 = Fan canister handle

5. Slide the replacement fan canister all the way into the unit, and then move the fan canister handle until it latches with the orange release button.

## 8.3.3 After replacing a fan canister

After replacing a fan canister, you must confirm that the new fan canister is working correctly. Then, you can gather support data and resume operations.

To confirm that the new fan-canister is working correctly:

1. Check the amber Attention LED on the new fan canister.
   **Note:** After you have replaced the fan canister, the Attention LED shows a steady amber color while the firmware checks that the fan canister was installed correctly. The LED goes off after this process is complete.
2. From the Recovery Guru in SANtricity System Manager, select **Recheck** to ensure the problem has been resolved.

3. If a failed fan canister is still being reported, repeat the steps in Removing and replacing a fan canister on page 4. If the problem continues to persist, contact technical support.
4. Remove the antistatic protection.
5. Collect support data for your storage array (see *Collecting support data for the storage system, page 53*).
   **Note:** Collecting support data before and after replacing a component ensures you can send a full set of logs to technical support in case the replacement does not resolve the problem.
6. Return the failed part as described in the RMA instructions shipped with the kit.

## 8.4 Seven-segment display codes

The following chapters explain the codes that are displayed on the seven-segment-display.

- *Seven-segment display sequence codes, page 49*
- *Seven-segment display codes when controller turns on, page 50*
- *Seven-segment display use cases, page 50*
- *Seven-segment display lock-down codes, page 52*

### 8.4.1 Seven-segment display sequence codes

Seven-segment display sequences enable you to understand errors and operational states of the various components in your storage array. Each sequence shows a two-digit category code, followed by a two-digit detail code. The category code appears at the start of a sequence and the detail code follows the category code with more specific information about the error. After each category code is displayed, the LED goes blank. Then the detail code appears and disappears, and the entire sequence is repeated. For example, if there is a power-on validation error during startup, you see the following codes displayed on the seven-segment display: SE, followed by Sx, in which SE is the category code and Sx is the detail code.
When the seven-segment display sequence starts, the Diagnostic LED is on (green).
The following table includes the seven-segment display sequence codes and descriptions:

| Category | Category code | Detail code |
|---|---|---|
| Startup error | SE | – **88**: Power-on default<br>– **dF**: Power-on diagnostic fault<br>– **Sx**: Power-on validation error |
| Operational error | OE | – **Lx**: Lock-down codes<br>See Seven-segment display lock-down codes. |
| Operational state | OS | – **OL**: Offline<br>– **bb**: Battery backup (operating on batteries)<br>– **OH**: CPU temperature exceeds the warning level<br>– **CF**: Component failure |
| Component failure | CF | – **dx**: Processor or cache DIMM<br>– **Cx**: Cache DIMM<br>– **Px**: Processor DIMM<br>– **Hx**: Host interface card |

| Category | Category code | Detail code |
|---|---|---|
| | | – **Fx** : Flash drive<br>– **bl**: Base controller card |
| Diagnostic failure | dE | – **Lx**: Lock-down codes<br>– See Seven-segment display lock-down codes. |
| Category delimiter | --<br>**Note:** The double hyphen (--) is the separator between categorydetail code pairs when more than one pair exists in the sequence. | |
| End-of-sequence delimiter | Blank: The display turns off at the end of a sequence. | |

## 8.4.2 Seven-segment display codes when controller turns on

The following table describes the seven-segment codes that are displayed when the controller turns on:

| Code | Description |
|---|---|
| 0xEA | DDR4 training failed |
| 0xE8 | No memory installed |
| 0x22 | No master boot record found on any boot device |
| 0x23 | No SATA drive installed |
| 0xAE | Booting OS |
| 0xAB | Alternate boot code |
| 0x40 | Invalid DIMMs |
| 0x41 | Invalid DIMMs |
| 0x42 | Memory test failed |
| 0x2A, 0x2B | Stuck bus, unable to read DIMM SPD data |
| 0x51 | DIMM SPD read failure |
| 0xA0, 0xA1, 0xA2, and 0xA3 | SATA drive initialization |
| 0x92 - 0x96 | PCI bus initialization |

## 8.4.3 Seven-segment display use cases

The following table shows seven-segment display use cases and the sequence that is displayed in each case:

| Use case | Display sequence |
|---|---|
| **Controller power-on** | |
| – Normal power-on controller insertion | SE 88 blank |
| – Controller inserted while held in reset | |
| **Operational states** | |
| Normal operation | xy (static controller tray ID) |
| Start-of-day (SOD) processing | OS Sd blank |
| The controller is placed in reset while showing the tray ID | OS OL blank |
| The controller is operating on batteries (cache backup) | OS bb blank |
| The CPU temperature has exceeded the warning level | OS OH blank |
| **Component failure when the controller is operational** | |
| Failed host interface card (HIC) | OS CF HX blank |
| Failed flash drive | OS CF Fx blank |
| **Power-on diagnostic failure** | |
| Failure of a component that is not a field replaceable unit | SE dF blank- |
| Processor DIMM failure | SE dF -- CF Px blank- |
| Cache memory DIMM failure | SE dF -- CF Cx blank- |
| Processor DIMM or cache memory DIMM failure | SE dF -- CF dx blank- |
| Host interface card failure | SE dF -- CF Hx blank- |
| Incorrect number of cache backup devices | SE LC -- CF Fx blank- |
| **The controller is suspended and there are no other errors to report** | |
| All lock-down conditions | OH Lx blank |
| **The controller is suspended because of component errors** | |
| Persistent processor DIMM error correcting code (ECC) errors | OE L2 -- CF Px blank- |
| Persistent cache DIMM ECC errors | OE L2 -- CF Cx blank- |
| Persistent processor or cache DIMM ECC errors | OE L2 -- CF dx blank- |
| **The controller is suspended as a result of persistent cache backup configuration errors** | |
| The write-protect switch is set during cache restore | OE LC blank- |

| Use case | Display sequence |
|---|---|
| The memory size changed with dirty data in the flash drives | OE L2 -- CF dx blank- |
| **The controller is suspended as a result of diagnostic errors** | |
| Cache memory diagnostic failure | dE L2 -- CF Cx blank- |
| Base controller diagnostic failure | dE L3 -- CF b1 blank- |
| Base controller I/O Controller chip (IOC) diagnostic failure | dE L3 -- CF b2 blank- |

### 8.4.4 Seven-segment display lock-down codes

Diagnostic lock-down codes are displayed when the controller is not operational, either because of a configuration problem or a hardware fault. The lock-down code is displayed as part of the seven-segment display sequence.
The following table includes the lock-down codes and describes the conditions that cause the controller to be in a suspended state:

| Lock-down code | Description |
|---|---|
| L0 | The controller types in a duplex configuration are mismatched. |
| L1 | Missing interconnect canister. |
| L2 | A persistent memory error has occurred. |
| L3 | A persistent hardware error has occurred. |
| L4 | A persistent data protection error has occurred. |
| L5 | An auto-code synchronization (ACS) failure has been detected. |
| L6 | An unsupported HIC has been detected. |
| L7 | A sub-model identifier either has not been set or has been mismatched. |
| L8 | A memory configuration error has occurred. |
| L9 | A link speed mismatch condition has been detected in either the I/O module (IOM) or the power supply. |
| Lb | A HIC configuration error has been detected. |
| LC | A persistent cache backup configuration error has been detected. |
| Ld | A mixed cache memory DIMMs condition has been detected. |
| LE | Uncertified cache memory DIMM sizes have been detected. |

| Lock-down code | Description |
|---|---|
| LF | The controller has locked down in a suspended state with limited SYMbol support. |
| LH | A controller firmware mismatch has been detected. |
| LJ | The controller does not have enough memory to support the configuration. |
| LL | The controller cannot access either midplane SBB EEPROM. |
| Ln | A module is not valid for a controller. |
| LP | Drive port mapping tables are not detected. |
| Lr | A component that is not a field replaceable unit (FRU) has been replaced. |
| Lt | A configuration data base corruption has been detected. |
| LU | The SOD reboot limit has been exceeded. |

In some cases, controllers detect errors during the startup process.
The following table describes seven-segment startup errors and conditions that result in the controller being in a suspended state:

| Startup error code | Description |
|---|---|
| S1 | The controller detects a checksum failure in EEPROM. |
| S2 | The SBB Signature/Revision is invalid. |
| S3 | An unsupported enclosure is detected in the storage array. |
| S4 | The power supplies are incapable of powering the controller. |
| S5 | The SBB pairing has failed. |

## 8.5 Collecting support data for the storage system

The following procedures describe how to collect support data for the storage system using SANtricity System Manager and Script editor in the Enterprise Management Window (EMW).

**Collecting support data using SANtricity System Manager**

1. Select **Support** > **Support Center** > **Diagnostics**.
2. Select **Collect Support Data**.
3. Click **Collect**.
   The file is saved in the Downloads folder for your browser with the name `supportdata.7z`

**Collecting support data using Script editor in the EMW**

1. Open the Enterprise Management Window (EMW) in SANtricity Storage Manager on your local host.

2. Select the storage system.
3. Select **Tools** > **Execute Script**.
4. Type the following command in the text box.
   `save storageArray supportData file="filename";`
   In this command, `filename` is the file path and the file name to which you want to save the support data. Enclose the file path and the file name in double quotation marks (" ").
   For example:
   `file="C:\Program Files\CLI\logs\support-data.7z"`
5. Select **Tools** > **Verify and Execute**

# 9 Support services and Bosch Academy

**Support**

Access our **support services** at www.boschsecurity.com/xc/en/support/.

Bosch Security and Safety Systems offers support in these areas:

- Apps & Tools
- Building Information Modeling
- Warranty
- Troubleshooting
- Repair & Exchange
- Product Security

**Bosch Building Technologies Academy**

Visit the Bosch Building Technologies Academy website and have access to **training courses, video tutorials** and **documents**: www.boschsecurity.com/xc/en/support/training/

**Bosch Security Systems B.V.**
Torenallee 49
5617 BA  Eindhoven
Netherlands
**www.boschsecurity.com**
© Bosch Security Systems B.V., 2023

**Building solutions for a better life.**

202311141706