DSA E-Series (E2800 60-bay)

DSA-N6C8X4-60AT | DSA-N6C8X8-60AT | DSA-N6C8XC-60AT | DSX-N6D8X4-60AT | DSX-N6D8X8-60AT | DSX-N6D8XC-60AT | DSX-NRCK40-INT8

en Quick Installation Guide

Table of contents

1	**Safety**	**4**
1.1	Safety message explanation	**4**
1.2	Safety precautions	**4**
1.3	Important safety instructions	**4**
1.4	Warning notices	**6**
1.5	Caution notices	**7**
1.6	Notices	**8**
2	**Introduction**	**9**
2.1	Parts included	**9**
2.2	Hardware registration	**9**
2.3	Additional equipment	**10**
2.4	Additional documentation	**10**
3	**Device views**	**11**
4	**Installation**	**13**
4.1	Installing a 60-bay unit	**13**
4.2	Installing a 60-bay unit with SuperRail	**14**
4.2.1	Installing SuperRail to square-hole four-post rack	**14**
4.2.2	Installing SuperRail to round-hole four-post rack	**16**
4.3	Installing the front bezel and end caps	**18**
4.4	Installing the drives	**19**
5	**Connection**	**20**
5.1	Connecting the expansion units	**20**
5.2	Connecting the controller unit to the network	**20**
5.3	Connecting the controller unit to the management hosts	**21**
5.4	Connecting the units to the power supply	**22**
5.5	Supported connections	**23**
6	**Turning on/off AC power**	**25**
6.1	Turning on AC power	**25**
6.2	Turning off AC power	**25**
7	**Installing and configuring the storage array**	**27**

1 Safety

1.1 Safety message explanation

Notice!
Indicates a situation which, if not avoided, could result in damage to the equipment or environment, or data loss.

Caution!
Indicates a hazardous situation which, if not avoided, could result in minor or moderate injury.

Warning!
Indicates a hazardous situation which, if not avoided, could result in death or serious injury.

1.2 Safety precautions

Caution!
The Low Voltage power supply unit must comply with EN/UL 60950. The power supply must be a SELV-LPS unit or a SELV - Class 2 unit (Safety Extra Low Voltage - Limited Power Source).

Caution!
Installation should only be performed by qualified service personnel in accordance with applicable local codes.

1.3 Important safety instructions

Read, follow, and retain for future reference all of the following safety instructions. Follow all warnings before operating the device.

- Unplug the unit from the outlet before cleaning. Follow any instructions provided with the unit.
- Clean only with a dry cloth. Do not use liquid cleaners or aerosol cleaners.
- Do not install device near any heat sources such as radiators, heaters, stoves, or other equipment (including amplifiers) that produce heat.
- Never spill liquid of any kind on the device.
- Take precautions to protect the device from power and lightning surges.
- Unless qualified, do not attempt to service a damaged device yourself. Refer all servicing to qualified service personnel.
- Install in accordance with the manufacturer's instructions in accordance with applicable local codes.
- Use only attachments/accessories specified by the manufacturer.
- Protect all connection cables from possible damage, particularly at connection points.
- Do not defeat the safety purpose of a polarized or ground-type plug.
- Permanently connected devices must have an external, readily operable mains plug or all-pole mains switch in accordance with installation rules.
- Pluggable devices must have an easily accessible socket-outlet installed near the equipment.

- The plug-socket combination must be accessible at all times, because it serves as the main disconnecting device.
- Any openings in the unit enclosure are provided for ventilation to prevent overheating and ensure reliable operation. Do not block or cover these openings.
- If you install this device in an enclosure, make sure the enclosure is properly ventilated according to the manufacturer’s instructions.
- Install the unit only in a dry, weather-protected location.
- Do not use this unit near water, for example near a bathtub, washbowl, sink, laundry basket, in a damp or wet basement, near a swimming pool, in an outdoor installation, or in any area classified as a wet location.
- To reduce the risk of fire or electrical shock, do not expose this unit to rain or moisture.
- Never push objects of any kind into this unit through openings as they may touch dangerous voltage points or short-out parts that could result in a fire or electrical shock.
- Power supply cords should be routed so that they are not likely to be walked on or pinched by items placed upon or against them, playing particular attention to cords and plugs, convenience receptacles, and the point where they exit from the appliance.
- Operate the unit only from the type of power source indicated on the label. Use only the power supply provided or power supply units with UL approval and a power output according to LPS or NEC Class 2.
- Do not open or remove the cover to service this unit yourself. Opening or removing covers may expose you to dangerous voltage or other hazards. Refer all servicing to qualified service personnel.
- Be sure the service technician uses replacement parts specified by the manufacturer. Unauthorized substitutions could void the warranty and cause fire, electrical shock, or other hazards.
- Do safety inspections after service or repairs to the device to make sure the device operates properly.
- Observe the relevant electrical engineering regulations.
- When installing in a switch cabinet, ensure that the unit and the power supply units have sufficient grounding.
- Connect the unit to an earthed mains socket.
- Use proper CMOS/MOS-FET handling precautions to avoid electrostatic discharge (ESD).
- For protection of the device, the branch circuit protection must be secured with a maximum fuse rating of 16 A. This must be in accordance with *NEC800 (CEC Section 60)*.
- Disconnect the power before moving the unit. Move the unit with care. Excessive force or shock may damage the unit and the hard disk drives.
- All the input/output ports are Safety Extra Low Voltage (SELV) circuits. SELV circuits should only be connected to other SELV circuits.
- If safe operation of the unit cannot be ensured, remove it from service and secure it to prevent unauthorized operation. In such cases, have the unit checked by Bosch Security Systems.
- Disconnect power supply and arrange for the device to be serviced by qualified personnel in the following cases, because safe operation is no longer possible:
  - The power cable/plug is damaged.
  - Liquids or foreign bodies have entered the device.
  - The device has been exposed to water or extreme environmental conditions.

  - The device is faulty despite correct installation/operation.
  - The device has fallen from a height, or the housing has been damaged.
  - The device was stored over a long period under adverse conditions.
  - The device performance is noticeably changed.
- Installation of the unit must comply with local and national electrical codes.
- Cluster media converters must be installed in a restricted access location.
- When installing the unit into a movable cabinet or rack, install from the bottom up for best stability.
- Use only manufacturer's supplied power cords and cables with manufacturer equipment.
- DC-based systems must be installed in a restricted access location and the two input power terminals for the DC power supply must be connected to separate isolated branch circuits.
- A qualified service person is required to make the DC power connection according to local and national electric codes / guidelines.
- Ensure your DC mains supply is earthed at the point of generation per IEC 60950-1.
- To reduce the risk of personal injury or equipment damage, allow internal components time to cool before touching them.
- Ensure that the equipment is properly supported or braced when installing options.
- This equipment is designed for connection to a grounded outlet. The grounding type plug is an important safety feature. To avoid the risk of electrical shock or damage to the equipment, do not disable this feature.
- Risk of electrical shock - If there is evidence of fire, water, or structural damage, never turn on the power to the equipment.
- Risk of electrical shock - Before removing or installing a power supply, turn off the power switch, and unplug the power cord.
- Pinching hazard - As you push the canister into the slot, ensure that your fingers are not pinched between the lever and the canister. The lever automatically moves toward the closed position as the canister is pushed into its slot.
- Do not remove more than one canister from the enclosure while power to the enclosure is turned on.
- Bosch products may contain Class 1 laser devices, Class 1M laser devices, or both.
- Keep away from moving fan blades.
- Do not use equipment in the cabinet as a shelf or work space.

1.4 Warning notices

This product relies on the building's installation for short-circuit (overcurrent) protection. Ensure that a fuse or circuit breaker no larger than 120 VAC, 20A U.S. (240 VAC, 16A international) is used on the phase conductors (all current-carrying conductors).

Warning!
High leakage current. Earth connection essential before connecting supply.

Warning!
To prevent personal injury or damage to the unit, never attempt to lift or tilt the unit using the handles of controller modules, power supplies, fans, and so on. These types of handles are not designed to support the weight of the unit.

Warning!
An electrical outlet that is not correctly wired could place hazardous voltage on metal parts of the system or the devices that attach to that system. It is the customer's responsibility to ensure that the outlet is correctly wired and grounded to prevent an electrical shock.

Warning!
To prevent electrical shock hazard, disconnect all power cables from the electrical outlet before relocating the system.

Warning!
Risk of bodily injury, A lead-acid battery can weigh up to 10.9kg (24.1lb). When you remove this type of battery, be prepared to support its weight. If the battery is dropped, the impact might cause bodily injury, including deep puncture wounds caused by the battery pins.

Warning!
For Class 1M laser products
Laser radiation. Do not view directly with optical instruments. Viewing the laser output with certain optical instruments (for example, eye loupes, magnifiers, and microscopes) within a distance of 100 mm might pose an eye hazard. Use of controls or adjustments or performance of procedures other than those specified herein might result in hazardous radiation exposure. Do not disassemble or remove any part of a small form-factor pluggable (SFP) transceiver because you might be exposed to laser radiation.

1.5 Caution notices

Caution!
The battery used in this device might present a risk of fire, explosion, or chemical burn if mistreated. DO NOT crush or puncture, short circuit external contacts, disassemble, dispose of in fire or water, heat above maximum temperature limit, or incinerate.

Caution!
DOUBLE POLE/NEUTRAL FUSING

Caution!
To avoid personal injury, before lifting this unit, remove all appropriate subassemblies per instructions to reduce the system weight.

Caution!
Equipment weighing less than 18 kg (39.7 lbs) can be lifted by one person.
Equipment weighing equal to or more than 18 kg (39.7 lbs) and less than 32 kg (70.5 lbs) requires two people to lift.
Equipment weighing equal to or more than 32 kg (70.5 lbs) and less than 55 kg (121.2 lbs) requires three people to lift.
Equipment weighing equal to or more than 55 kg (121.2 lbs) and less than 72 kg (158.7 lbs) requires four people to lift.
Equipment weighing equal to or more than 72 kg (158.7 lbs) requires a lifting device.

1.6 Notices

Notice!
This is a **class A** product. In a domestic environment this product may cause radio interference, in which case the user may be required to take adequate measures.

Notice!
Video loss is inherent to digital video recording; therefore, Bosch Security Systems cannot be held liable for any damage that results from missing video information.
To minimize the risk of losing information, we recommend multiple, redundant recording systems, and a procedure to back up all analog and digital information.

	Disposal Your Bosch product has been developed and manufactured using high-quality materials and components that can be reused. This symbol means that electronic and electrical devices that have reached the end of their working life must be disposed of separately from household waste. In the EU, separate collecting systems are already in place for used electrical and electronic products. Please dispose of these devices at your local communal waste collection point or at a recycling center.

Notice!
Do not dispose batteries in household waste. Dispose of batteries only at suitable collection points and, in the case of lithium batteries, mask the poles.

Caution!
Battery replacement - For qualified service personnel only
A lithium battery is located inside the unit enclosure. To avoid danger of explosion, replace the battery as per instructions. Replace only with the same or equivalent type recommended by the manufacturer. Dispose of the replaced battery in an environmentally friendly way and not with other solid waste. Refer all servicing to qualified service personnel.

	Do not place this unit on an unstable stand, tripod, bracket, or mount. The unit may fall, causing serious injury and/or serious damage to the unit.

Information on sales, delivery, storage, and working life period
No restrictions or conditions apply for the sale or delivery of this product.
If stored under the specified conditions, the storage period is not restricted.
If used for the specified purpose in compliance with the safety instructions and technical specifications, the working life period of the product is in accordance with normal expectations for this type of product.

Information on equipment use
Device is for professional installation only. Operation of the devices is not intended for personal or household use. There are no restrictions to use the device in commercial and industrial areas, except those mentioned in the Safety information.

2 Introduction

This manual is written for professional system integrators and PC technicians. It provides information for the installation of the chassis. The installation should be done by experienced and qualified technicians only.
Before you start the installation, read and follow the safety instructions.

2.1 Parts included

Make sure that all parts are included and not damaged. If the packaging or any parts are damaged, contact your shipper. If any parts are missing, contact your Sales or Customer Service Representative.

Dual controller units

Quantity	Component
1	DSA E2800 60-bay dual controller (empty enclosure)
6	Set of 10 hard disks
1	Quick Installation Guide
1	Rack mount kit (set of 2 rails)
1	Plastic front bezel
2	Power cable C19 - C20
2	Diagnostic cable

Expansion units

Quantity	Component
1	DSA E2800 60-bay expansion unit (empty enclosure)
6	Set of 10 hard disks
1	Quick Installation Guide
1	Rack mount kit (set of 2 rails)
1	Plastic front bezel
2	Power cable C19 - C20
2	Mini SAS HD to Mini SAS HD cable (1 m)

2.2 Hardware registration

We recommend that you register your device. If you already have an existing NetApp NOW account, add your device to it. If you have no NetApp NOW account, create a new account using the Bosch Product Registration page.

Registering your device using an existing NetApp NOW account
Sign in to your NetApp NOW account and register your device here.

Creating a new account using the Bosch Product Registration page
Register your product under:
https://www.boschsecurity.com/product-registration/

2.3 Additional equipment

You may need the following equipment:

- A Phillips No. 2 and a medium flat-blade screwdriver
- An ESD wrist strap
- An Ethernet switch or network hub
- Ethernet cables
- Management station or personal computer

2.4 Additional documentation

For warnings and detailed installation instructions, refer to the DSA E2800 installation manual and additional documentation in the online product catalog.

More information

For more information, software downloads, and documentation, go to www.boschsecurity.com and the corresponding product page.

3 Device views

60-bay dual controller unit or expansion unit - front view

1	7-segment display	**2**	Power LED
3	Attention LED	**4**	Locate LED
5	Drive canister		

60-bay dual controller unit - rear view

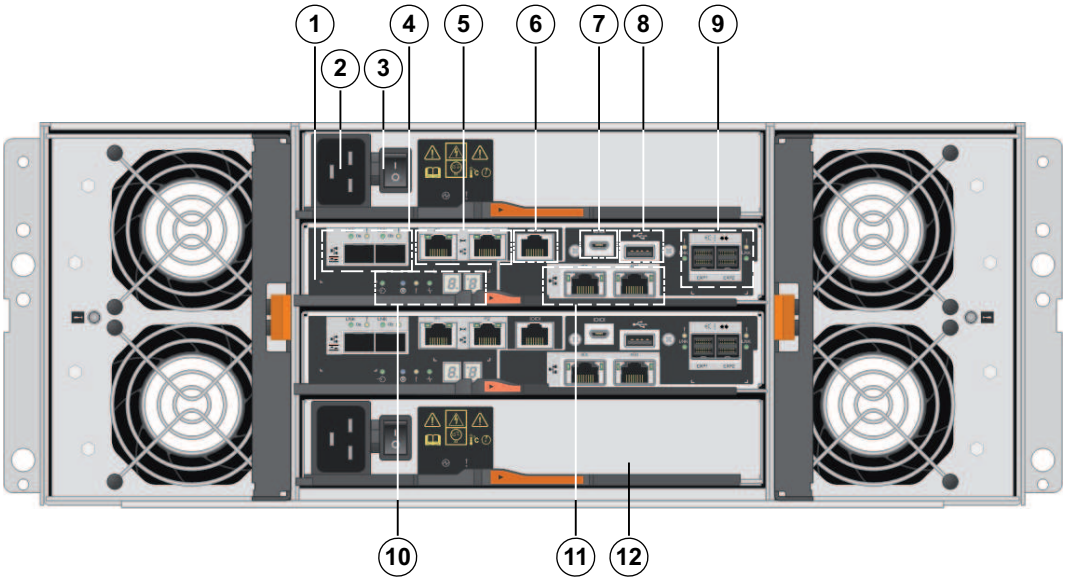

1	Controller A	**2**	Mains connection 240 VAC
3	On/off switch	**4**	Channel 3 (left) / Channel 4 (right) - Host interface ports (Dual 10 GB iSCSI, optical) **Note:** Use only RJ45 Base-T ports **or** optical ports.

5	Management port 1 (left) / Management port 2 (right) - Dual 1 Gigabit Ethernet **Note:** Use only Port 1 per controller (default).	**6**	Serial port (RJ45)
7	Serial port (micro USB)	**8**	USB port (only for factory use)
9	Dual 12 Gb SAS drive expansion ports	**10**	Status display
11	Channel 5 (left) / Channel 6 (right) - Host interface ports (Dual 10 GB iSCSI, RJ45 Base-T) **Note:** Use only RJ45 Base-T ports **or** optical ports.	**12**	Controller B (see Controller A)

60-bay expansion unit - rear view

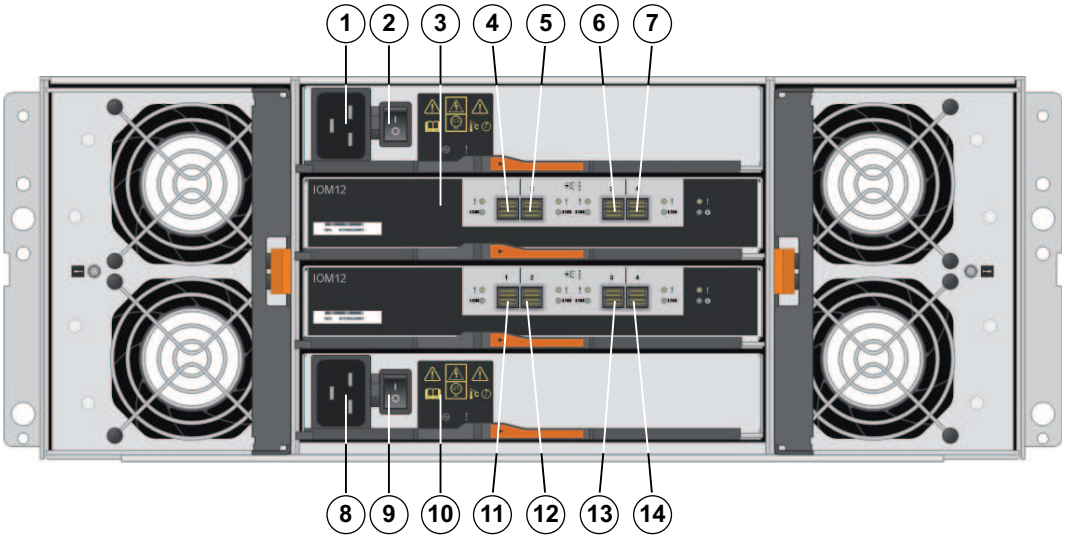

1	Mains connection 240 VAC	**2**	On/off switch
3	IOM A	**4**	IOM A - SAS port 1
5	IOM A - SAS port 2	**6**	IOM A - SAS port 3
7	IOM A - SAS port 4	**8**	Mains connection 100 - 240 VAC
9	On/off switch	**10**	IOM B
11	IOM B - SAS port 1	**12**	IOM B - SAS port 2
13	IOM B - SAS port 3	**14**	IOM B - SAS port 4

4 Installation

4.1 Installing a 60-bay unit

You can install the unit in a four-post rack or system cabinet.
Observe the following:

- You can install the unit in either a square-hole or round-hole rack.
- If you are installing the unit in a cabinet not provided by Bosch:
  - Ensure that the rack is adequate for the weight and size of the unit to be installed.
  - Calculate the thermal output of your equipment and compare the results with the target system cabinet's thermal rating. You might need to remove the system cabinet doors to improve airflow through the system cabinet.
    For thermal rating information refer to the rack or system cabinet manuals provided by the manufacturer.
- You must use only the screws that are provided in the kit.

Notice!
When installing the units, load the cabinet so as not to make it top-heavy. One approach is to place the controller-unit in the middle portion of the cabinet while allowing room for expansion units to be placed above and below the controller unit.

To install a 60-bay controller unit or expansion unit:

1. If you are lifting and moving the unit by hand, attach the four handles. Push up on each handle until it clicks into place.

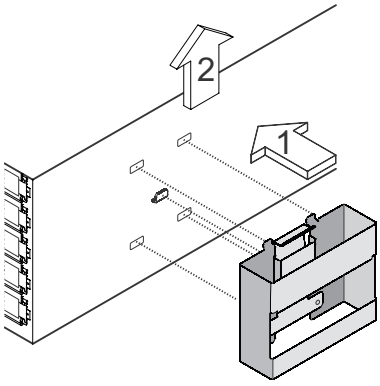

2. Place the back of the unit (the end with the connectors) on the rails.
   Caution: An empty unit weighs approximately 60 kg (132 lbs). Four persons are required to safely move an empty unit. A fully loaded unit weighs approximately 113 kg (250 lbs). A mechanical lift is required to safely move the unit.
3. Supporting the unit from the bottom, slide the unit into the cabinet. If you are using the handles, use the thumb latches to detach the handles as you slide the unit in.

4. Secure the unit to the front of the cabinet by inserting two screws in the 1st and 3rd holes (counting down from the top) on each side.

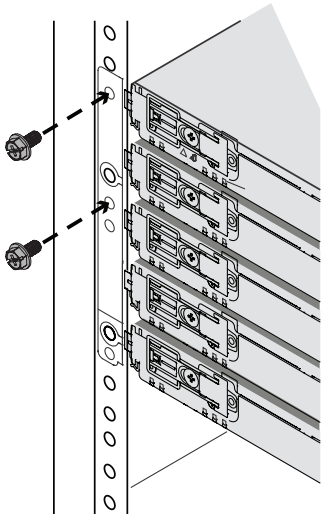

4.2 Installing a 60-bay unit with SuperRail

You can install the unit in a four-post rack or system cabinet.
Observe the following:

- You can install the unit in either a square-hole or round-hole rack.
- If you are installing the unit in a cabinet not provided by Bosch:
  - Ensure that the rack is adequate for the weight and size of the unit to be installed.
  - Calculate the thermal output of your equipment and compare the results with the target system cabinet's thermal rating. You might need to remove the system cabinet doors to improve airflow through the system cabinet.
    For thermal rating information refer to the rack or system cabinet manuals provided by the manufacturer.
- You must use only the screws that are provided in the kit.

Notice!
When installing the units, load the cabinet so as not to make it top-heavy. One approach is to place the controller-unit in the middle portion of the cabinet while allowing room for expansion units to be placed above and below the controller unit.

4.2.1 Installing SuperRail to square-hole four-post rack

Scope of delivery: SuperRail for square-hole four-post rack

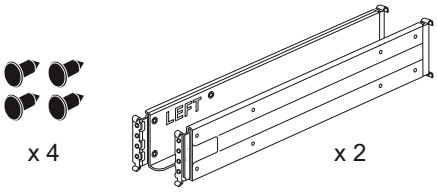

To install SuperRail to square-hole four-post rack:

1. Determine where you want to install the unit in the rack or system cabinet.
   Note: Whenever possible, install the units from the bottom of the rack up, so that you can use the units underneath as a guide for installing the next set of rails.
2. Attach the rails to the rack or system cabinet as follows:
   - Hook in the left rail in the adapter brackets and tighten all screws completely to hold the rail firmly in place.

– Repeat this step for the right rail.

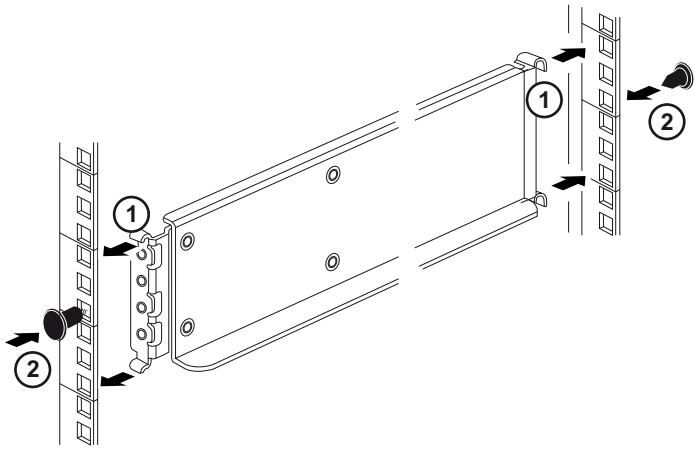

3. Place the back of the unit (the end with the connectors) on the rails.
   Caution: An empty unit weighs approximately 60 kg (132 lbs). Four persons are required to safely move an empty unit. A fully loaded unit weighs approximately 113 kg (250 lbs). A mechanical lift is required to safely move the unit.

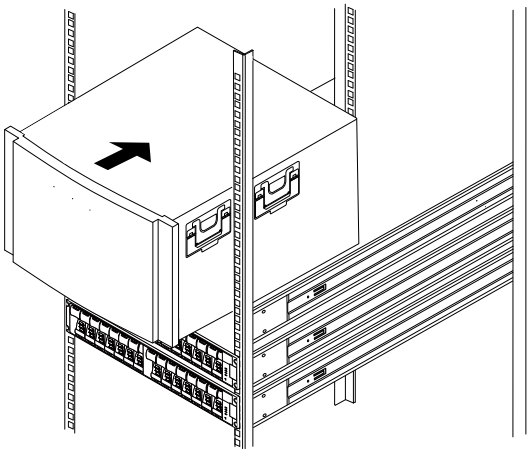

4. Carefully slide the unit all the way onto the rails.
   Note: If applicable, you might need to remove the end caps or the system bezel to secure the unit to the rack post. Replace the system bezel when you are done.
   Note: Do not place additional equipment on the rails after you finish installing the unit. The rails are not designed to bear additional weight.

5. For both front rail posts: Secure the unit to the front of the rack or system cabinet and rails by inserting the screws through the holes of the unit, the holes on the rack or system cabinet, and the holes on the front of rails.

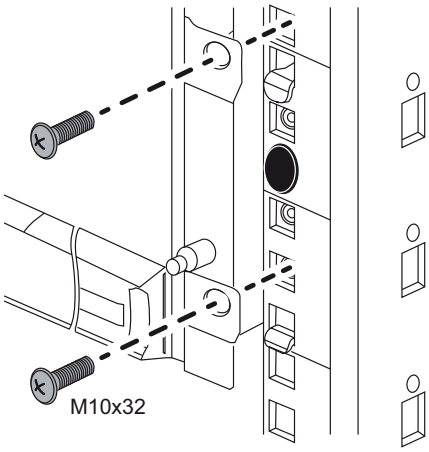

6. For both rear rail posts: Secure the unit to the rear of the rack or system cabinet and rails by inserting the screws through the hole of the unit, the hole on the rack or system cabinet, and the hole on the front of rails.

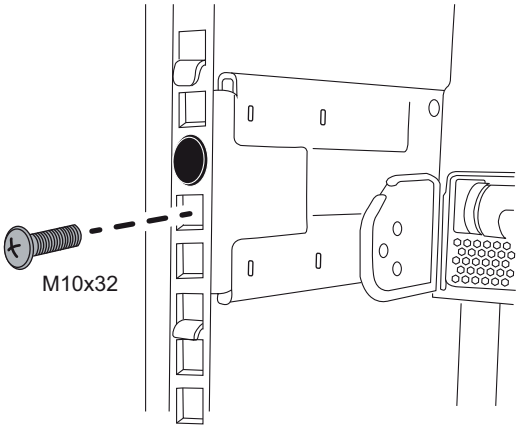

7. If applicable, replace the end caps or the system bezel.

4.2.2 Installing SuperRail to round-hole four-post rack

When installing SuperRail on a standard round-hole four-post rack you must use the 4 round-to-square hole adapter brackets.

Scope of delivery: SuperRail for round-hole four-post rack

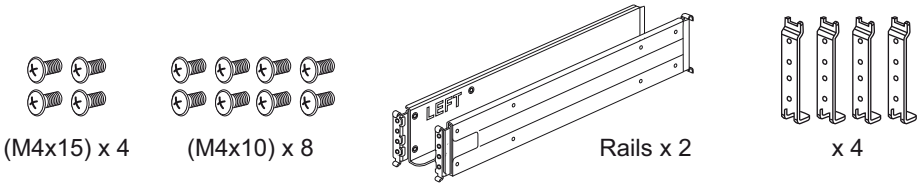

To install SuperRail to round-hole four-post rack:

1. Determine where you want to install the unit in the rack or system cabinet.
   Note: Whenever possible, install the units from the bottom of the rack up, so that you can use the units underneath as a guide for installing the next set of rails.

2. Tighten the round-to-square hole adapter brackets with the screws to the four rack posts.
   Leave enough room for the hook-piece of the rail between the rail adapters and the rack posts.

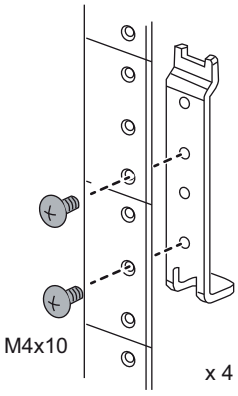

3. Attach the rails to the rack or system cabinet as follows:
   – Hook in the left rail in the adapter brackets and tighten all screws completely to hold the rail firmly in place.
   – Repeat this step for the right rail.

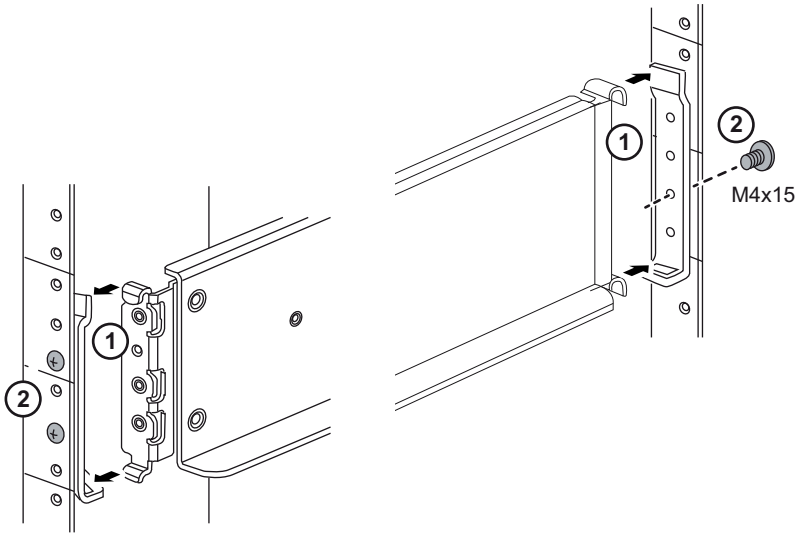

4. Place the back of the unit (the end with the connectors) on the rails.

Caution: An empty unit weighs approximately 60 kg (132 lbs). Four persons are required to safely move an empty unit. A fully loaded unit weighs approximately 113 kg (250 lbs). A mechanical lift is required to safely move the unit.

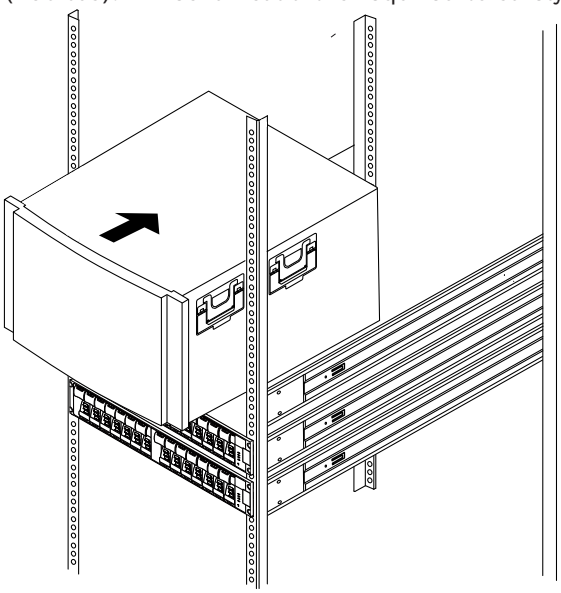

5. Carefully slide the unit all the way onto the rails.
   Note: If applicable, you might need to remove the end caps or the system bezel to secure the unit to the rack post. Replace the system bezel when you are done.
   Note: Do not place additional equipment on the rails after you finish installing the unit. The rails are not designed to bear additional weight.
6. For both front rail posts: Secure the unit to the front of the rack or system cabinet and rails by inserting the screws through the holes of the unit, the holes of the mounting brackets, the holes on the rack or system cabinet, and the holes on the front of rails.

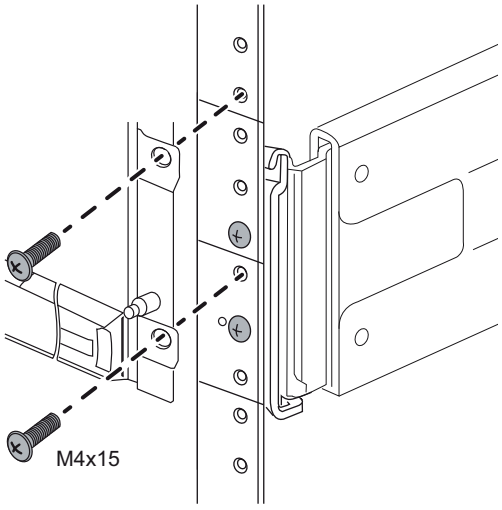

7. If applicable, replace the end caps or the system bezel.

4.3 Installing the front bezel and end caps

A front bezel covers the front of the controller unit and the expansion unit, while left and right end caps cover the mounting flanges on each unit.
To install the front bezel:

1. Position the front bezel in front of the controller unit or the expansion unit so that the holes at each end align with the fasteners on the unit.
2. Snap the bezel into place.

To install the end caps:

1. Position the left end cap in front of the controller unit or the expansion unit so that the holes in the end cap align with the fasteners on the left side of the unit.
2. Snap the end cap into place.
3. Repeat these steps for the right end cap.

4.4 Installing the drives

Notice!
To avoid damaging the hardware, never move a unit if drives are installed. Remove all drives before moving the unit.

To install the drives:

1. Put on the ESD wristband to protect the drives from static electricity.
2. Release the levers on the top drive drawer. Then, slide the drawer out by using the levers.
3. Raise the handle on the drive to vertical.

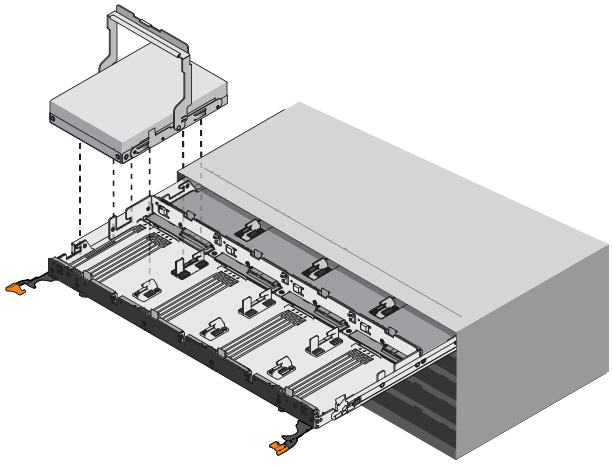

4. Starting with the leftmost slot at the front, align the two raised buttons on the drive with the notches on the drawer. Then, pressing gently on the top of the drive, rotate the drive handle down until the drive snaps into place.
5. Install the remaining drives. Observe the following if you are installing fewer than 60 drives, SSD drives or drives with different capacities:
   Install drives in the front four slots of each drawer (a minimum of 20 drives in each unit) to maintain adequate airflow for cooling.
   – Distribute any remaining drives across the drawers. If possible, install an equal number of each type of drive in each drawer to allow for the creation of Drawer Loss Protected volume groups or disk pools.
   – Distribute any SSD drives evenly across the drawers.
6. Slide the drawer back in by sliding it from the center and closing both levers gently.
7. Attach the bezel to the front of the unit.

5 Connection

5.1 Connecting the expansion units

The expansion units are shipped with the appropriate number of SAS cables.
To connect the components:

- Connect the SAS cable from the SAS port on the controller unit to the SAS port on the expansion unit.

One expansion unit - dual controller configuration

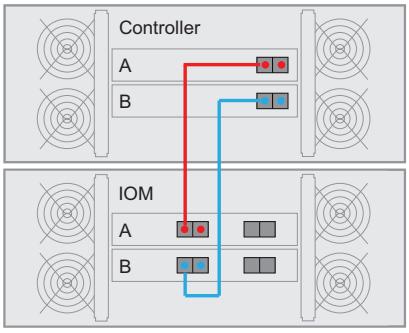

Two expansion units - two controller configuration

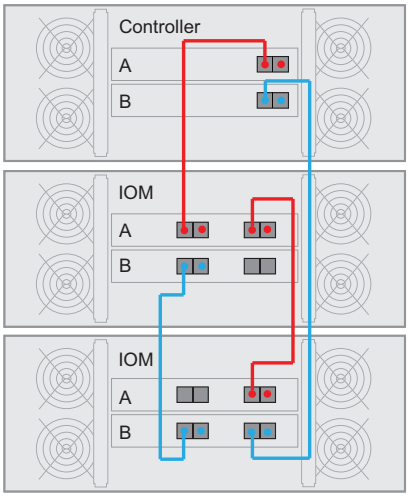

Notice!
You can connect a 60-bay DSA E2800 controller unit to a maximum of two 60-bay DSA E2800 expansion units.

5.2 Connecting the controller unit to the network

In case of a Bosch Video Recording Solution a host is an IP camera. To connect the controller unit to the Ethernet one or two of two available iSCSI host ports must be connected to the Ethernet. The iSCSI port connections will then be used by the IP cameras for video data traffic.
To connect the controller unit to the network:

- Connect the cable from the iSCSI host port of the controller unit to a port on the switch.
  Note: Make sure that the iSCSI ports of the controller unit and the relevant IP camera ports are in the same range on the switch.

Switch topology

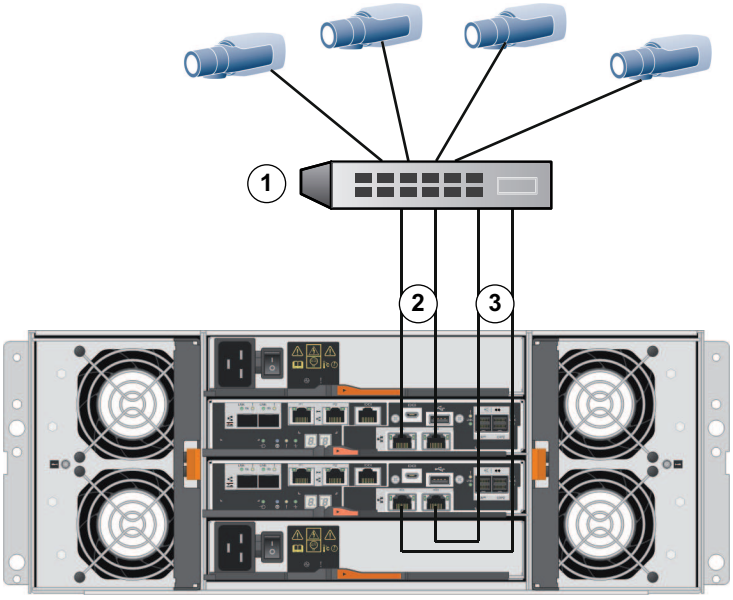

1	Switch	**2**	Controller A - iSCSI host interface ports (RJ45 Base-T) **Note:** Optionally, use the optical host interface ports.
3	Controller B - iSCSI host ports (RJ45 Base-T) **Note:** Optionally, use the optical host interface ports.		

5.3 Connecting the controller unit to the management hosts

The management host directly manages storage arrays over an out-of-band network. This section describes how to set up an out-of-band connection between the Ethernet port of a controller unit and the management host.

To set up an out-of-band connection:

1. Connect Ethernet cables between port 1 of controller A and port 1 of controller B to an external Ethernet switch or hub.
2. Connect the management host to the Ethernet switch or hub.

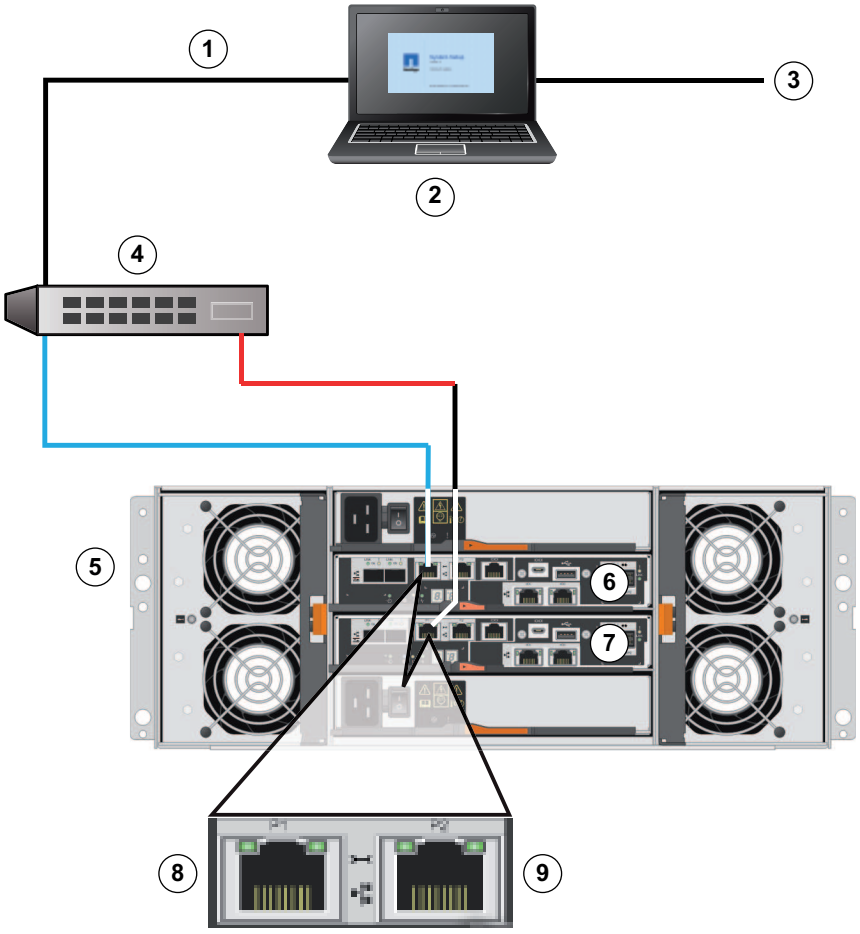

1	Private network	**2**	Management station or personal computer
3	Local Area Network (LAN)	**4**	Switch or hub
5	Dual controller unit	**6**	Controller A
7	Controller B	**8**	Management port 1 (Ethernet) **Note:** Used as default.
9	Management port 2 (Ethernet) **Note:** Reserved for maintenance operations if the hardware contains a second Ethernet port.		

Notice!
Ethernet port 2 should be reserved for maintenance operations if your hardware contains a second Ethernet port.

5.4 Connecting the units to the power supply

To connect the controller unit and the expansion units to the power supply:

1. Confirm that the two power switches on the controller unit are off.
   Note: If you have expansion units, confirm that their power switches are off.

2. Connect the two power cords of the controller unit to different power distribution units in the cabinet or rack.
   Note: If you have expansion units, connect the two cords accordingly.

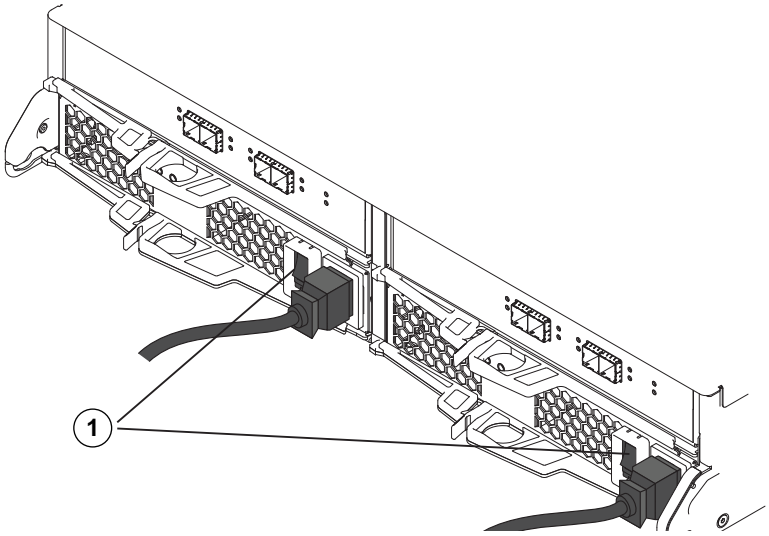

   1 = Power switch
3. If you have expansion units, turn on their two power switches first.
   Note: Wait for 2 minutes to allow hard disks to spin up before applying power to the controller unit.
4. Turn on the two power switches on the controller unit and wait approximately 3 minutes.
   Note:
   – The default IP addresses will take approximately 3 minutes to initialize from the time the network is attached.
   – Do not turn off the power switches during the power-on process.
   – The fans are very loud when they first start up. The loud noise during start-up is normal.
5. Check the LEDs and the seven-segment display on the back of each controller.
   Note: The seven-segment display shows a repeating sequence (OS, Sd, blank) to indicate that the controller is performing start-of-day processing. After the controller has started, the display shows the tray ID.
6. If any of the amber LEDs are on, there might be a problem with a component. Confirm you completed the installation steps correctly. If you are unable to resolve the problem, contact your local Bosch Technical Support team.

5.5 Supported connections

We recommend using the following connection methods:

	Default	Alternatively
Controller A Controller B	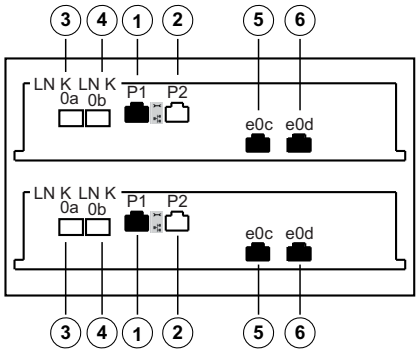	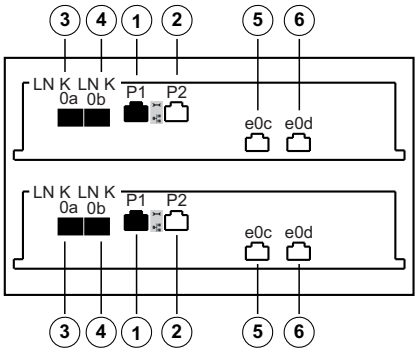

1	Management port 1 (Ethernet) **Note:** Used as default.	**2**	Management port 2 (Ethernet) **Note:** Reserved for maintenance operations if the hardware contains a second Ethernet port.
3	Channel 3 / Controller A and Channel 3 / Controller B (iSCSI, optical)	**4**	Channel 4 / Controller A and Channel 4 / Controller B (iSCSI, optical)
5	Channel 5 / Controller A and Channel 5 / Controller B (iSCSI, RJ45 Base-T)	**6**	Channel 6 / Controller A and Channel 6 / Controller B (iSCSI, RJ45 Base-T)

The Multipathing feature is enabled on dual controller units by default.
Dual controller units support 2 different cabling options for the iSCSI ports.

- Default: iSCSI, RJ45 Base-T
  Note:
  - Channel 5 / Controller B is the fallback of Channel 5 / Controller A and Channel 6 / Controller A is the fallback of Channel 6 /. Controller B
- Alternatively: iSCSI, optical
  Note:
  - Channel 3 / Controller B is the fallback of Channel 3 / Controller A and Channel 4 / Controller A is the fallback of Channel 4 /. Controller B

6 Turning on/off AC power

6.1 Turning on AC power

Make sure the Ethernet cable is connected to the management host. The default IP addresses will take three minutes to initialize from the time the network is attached.
The default IP addresses for controllers running on software 11.60 or earlier are:
- Controller A, Port 1: 192.168.128.101
- Controller B, Port 1: 192.168.128.102

The default IP addresses for controllers running on software 11.60.2 or later are:
- Controller A, Port 1: 169.254.128.101
- Controller B, Port 1: 169.254.128.102

Notice!
DHCP is attempted for the first three minutes of attaching the network cables. If a DHCP lease was not offered within this time, the controllers will use the default addresses.

To turn on power to the controller unit or the expansion units:
1. Connect the cabinet to the power supply.
2. Turn on the power distribution units of the cabinet.
3. If you have expansion units, turn on their two power switches first.
   Note: Wait for 2 minutes to allow hard disks to spin up before applying power to the controller unit.
4. Turn on the two power switches on the controller unit and wait approximately 3 minutes.
   Note:
   - The default IP addresses will take approximately 3 minutes to initialize from the time the network is attached.
   - Do not turn off the power switches during the power-on process.
   - The fans are very loud when they first start up. The loud noise during start-up is normal.
5. Check the LEDs and the seven-segment display on the back of each controller.
   Note: The seven-segment display shows a repeating sequence (OS, Sd, blank) to indicate that the controller is performing start-of-day processing. After the controller has started, the display shows the tray ID.
6. If any of the amber LEDs are on, there might be a problem with a component. Confirm you completed the installation steps correctly. If you are unable to resolve the problem, contact your local Bosch Technical Support team.
7. Connect all cables if required.
8. Start recording of the cameras.

6.2 Turning off AC power

We recommend turning off the system when moving the system to another location and upgrading or replacing the hardware, for example.
To turn off power to the controller unit or the expansion units:
1. Stop recording of the cameras and wait for 5 minutes.
2. Ensure there are no background operations in progress.
3. Turn off the controller-unit and wait that all LEDs are off.
4. Turn off the expansion units and wait for 2 minutes to allow hard disks to spin down.

5. Disconnect the cables if required.

7 Installing and configuring the storage array

For the basic setup use the Configuration Manager software. For detailed information, in Configuration Manager refer to the Help.

More information

For more information, software downloads, and documentation, go to www.boschsecurity.com and the corresponding product page.

Bosch Security Systems B.V.
Torenallee 49
5617 BA Eindhoven
Netherlands
www.boschsecurity.com
© Bosch Security Systems B.V., 2023

Building solutions for a better life.

202311141713