SMP500

Updated: November 22, 2023

1	145504	Motor Retainer Ring
2	145138	Thermal Seal
3	140373	Motor 5.7 120V 491.3.725
4	100630	CtrlMod:ECS 120V Low w/Kit
5	100346	Cord
6	115077	SUI Cover
7	100601	Control Module SUI Board
8	100602	Wire Harness ECS/SUI
9	105147	Blk Atlis Intake
10	110356	FltrBg: 11" Tall SM Expansion Filter
11	145341	Latch
12	195001	Receptacle Gasket-Sm Dia
13	120312	DrtRcpt: BLK 4 Gal/15 L
14	145137	Motor Gasket
15	145319	Exhaust Extension 3.0Lg./1.9ID
16	145330	Wall Mounting Bracket
NP	030185	BLK Sound Off Muffler

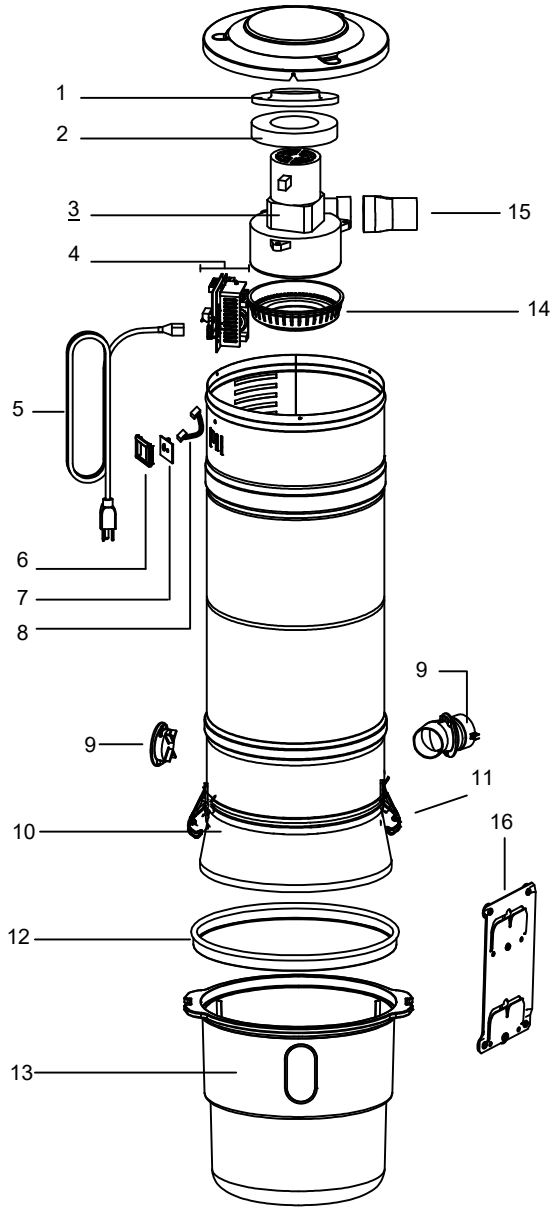

Our parts policy is to carry the most current color/version of any particular part.