Instructions for 0E-RXDST Request-to-Exit PIR Detector

Application:

The ADI PRO 0E-RXDST combines a passive-infrared detector with relay output to allow control of door ingress and egress in request-to-exit (REX) applications. It is UL Listed as an access control device under the UL 294 standard. It is for indoor use only. 0E-RXDST is not designed for use as the primary means of exit for emergency egress.

0E-RXDST can be ceiling or wall mounted over the door and the detection pattern can be tailored via vertical aim adjustment and/or masking of the detection pattern.

The relay output consists of two form "C" contacts that can be adjusted to latch from 0.5 second to 64 seconds. Resettable or non-resettable can be selected for the latch time. The relay can also be programmed to fail safe (doors unlocked) or fail secure (doors locked) mode in the event of a power loss.

0E-RXDST provides advanced features not included on ADI PRO model 0E-RXD, including:

- Sequential Triggering to require another input (such as motion detector or pressure mat) prior to the REX detector motion trigger to unlock the door (extra security feature to thwart invalid motion triggering)
- Internal sounder (to annunciate door ajar) with volume control
- Door contact monitoring to warn if door is left ajar or door is opened prior to motion detection
- Disable function via external device such as access control system
- Selection of normal or high detection sensitivity for the detector's PIR
- Door Security to prevent tailgating and other unauthorized entry
- Remote input for device such as a card reader to unlock the door
- Tamper switch

An optional trimplate (ADI PRO model 0E-TP) is available for easy and attractive installation using a standard single gang electrical box oriented horizontally.

Product specifications:

- Voltage input: 12VDC or 12VAC; 24VDC or 24VAC
- Current draw: 5-75mA @ 12VDC, depending on setting and status
- NO INTERNAL BATTERY. Budget 38mAh per hour standby
- Relay output: 2 Form C relay contacts rated 2A 30VDC/VAC max. for DC resistive loads
- Sounder output: Adjustable up to 75dB@1m (dB not UL evaluated)
- Tamper switch rating: 12VDC, 50mA
- Indicator: Green LED for PIR detection
- Relay latch duration: Adjustable from 0.5 second to 64 seconds
- Timer modes: Selectable for resettable (cumulative) or non-resettable (counting)
- Power loss operation modes: Selectable for fail safe (doors unlocked) or fail secure (doors locked)
- Mounting locations: Above door(s) controlled on door frame, wall or ceiling
- Mounting height: 7′ to 15′
- Housing: High impact ABS plastic
- Dimensions: 7″W X 1.75″H X 1.88″ D (178W X 44H X 48Dmm)
- Operating temperature: -20°F to 120°F (-29°C to 49°C); RH: 0-95%
- RFI immunity: 26MHz to 1000 MHz @ 50 V/m (not verified by UL)

Wiring:

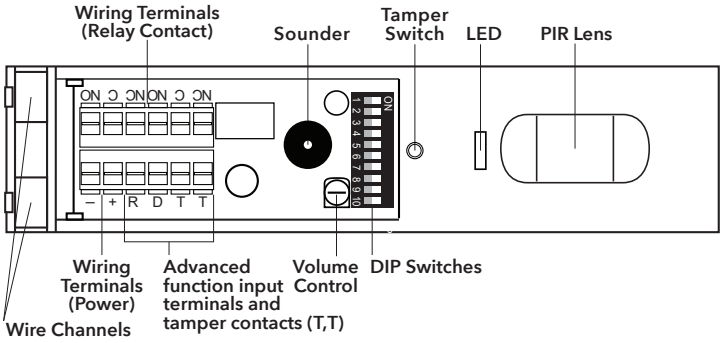

All wiring connections should be made and verified before any power, including standby battery if used, is connected to detector.

Connect wires to terminals as follows:

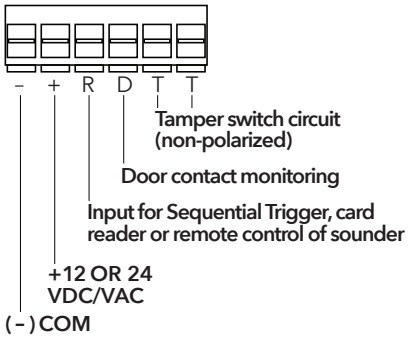

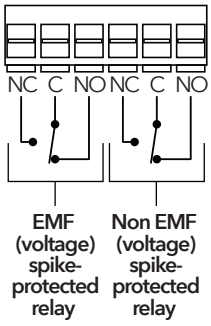

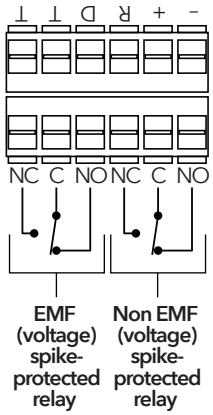

Use **EMF (voltage) spike-protected relay** when connecting inductive loads to the detector to protect against possible harmful EMF spikes.

Use **Non EMF (voltage) spike-protected relay** for non-inductive loads. When connecting an inductive load to the detector that is not spike-protected (such as a magnetic lock), use either a 1KV 1A diode or 100V, 4A bridge rectifier. Otherwise relay life may be shortened.

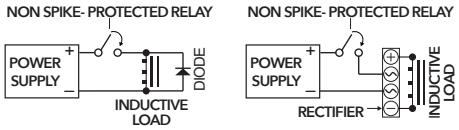

Most UL1034 listed magnetic locks are already EMF spike-protected and therefore do NOT require a diode or bridge rectifier, and adding either could cause response delays. Check magnetic lock specifications.

ADI PRO

Choose either Fail Safe or Fail Secure operation and wire to either EMF or Non EMF contacts as follows:

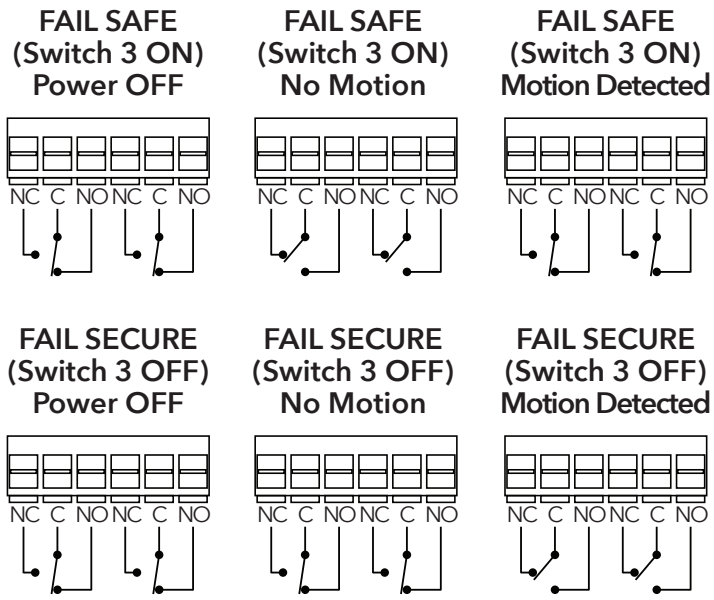

In a basic installation, power is routed through the on-board relay to a magnetic lock and when motion triggers the PIR detector, the relay is activated to cut the power to the lock, thereby unlocking the door. The wiring can be as simple as follows (Fail Safe mode–DIP switch 3 ON):

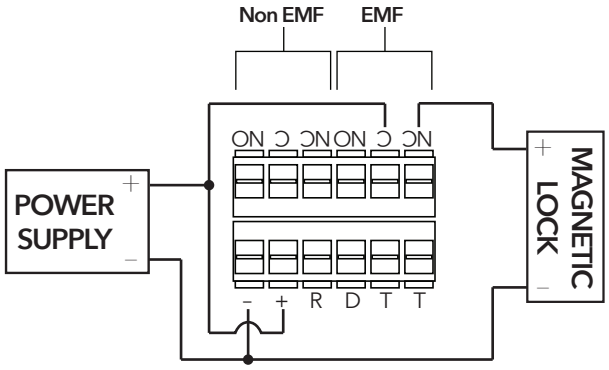

In an installation using a card reader for access from outside the premises, allowing either the card reader or the REX detector to unlock the door, the wiring is typically as follows (Fail Safe mode–DIP switch 3 ON, and DIP switches 9 and 10 OFF (Card Reader mode):

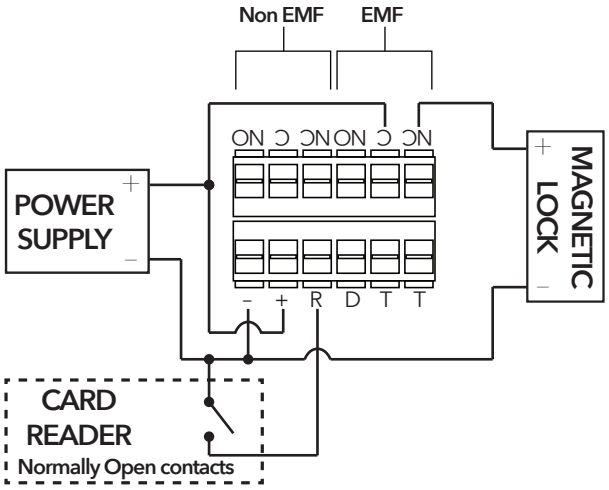

In an installation requiring direct control of the internal sounder via door contacts or other remote contacts, the wiring is typically as follows (Fail Safe mode–DIP switch 3 ON, and DIP switch 9 OFF and 10 ON– Direct Sounder Control mode):

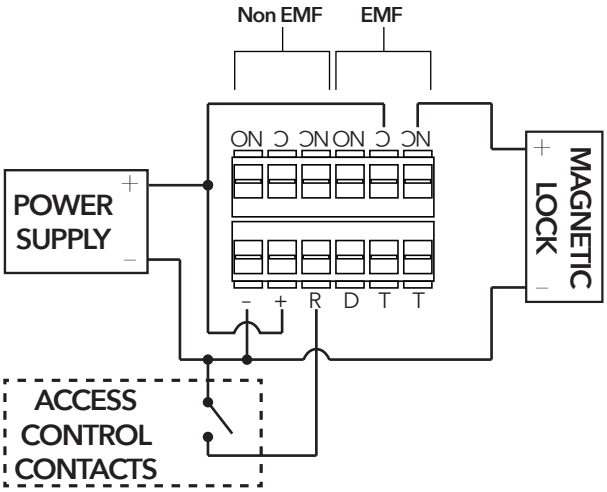

The sounder remains on until the contacts are closed. The relay and relay latch time are not affected, nor is power removed from the lock.

In an installation requiring higher security, Sequential Triggering can be implemented to unlock the door (via triggering the PIR motion detector) only when another device–such as a switch mat, photo beam or PIR–is activated first, and the wiring is typically as follows (Fail Safe mode–DIP switch 3 ON, and DIP switch 9 ON and 10 OFF– Sequential Triggering mode):

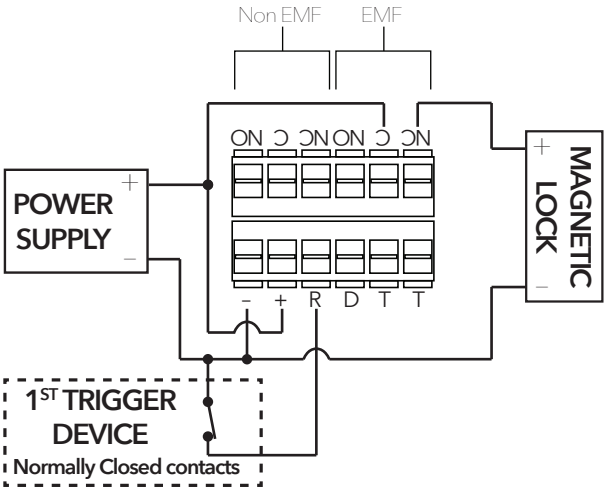

When the first trigger device is activated, motion detection by 0E-RXDST can unlock the door while the device remains activated (Terminal R contact is open) and within 10 seconds of when it deactivates (resets and terminal R contact closes). After the 10 seconds elapse, motion detection by 0E-RXDST cannot unlock the door unless the first trigger device is once again activated prior to the motion detection.

One of two options may be selected to utilize **Door Contact Monitoring** to warn if door is left ajar or door is opened prior to motion detection. In **Configuration 1**, the sounder will activate if the relay timer is in the last 10 seconds of latch time (latch time must be set to 16 seconds or more via DIP switches 4, 5 and 6–see DIP Switch Settings) and the door is held or propped open. The sounder will also activate if the door is opened prior to motion detection. In either circumstance, the sounder will remain on until either the door closes or motion is detected. The wiring is typically as follows:

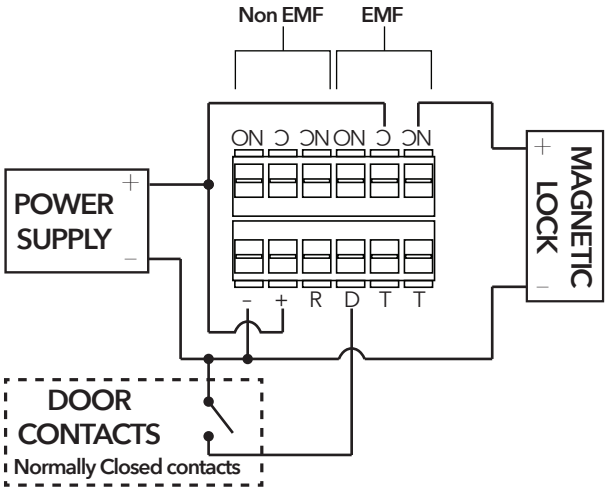

Door Contact Monitoring Configuration 2 causes the relay to drop out after 10 seconds if the detector is triggered by motion but the door is not opened, or after 2 seconds if the detector is triggered by motion and the door is opened and then closed. This is designed to prevent tailgating and other unauthorized entry. The detector can be triggered by motion or another trigger device such as a switch mat, photo beam or PIR (similar to first trigger devices for Sequential Triggering) if the R terminal is used (DIP switch 2 must be ON–Resettable Mode). The wiring is typically as follows:

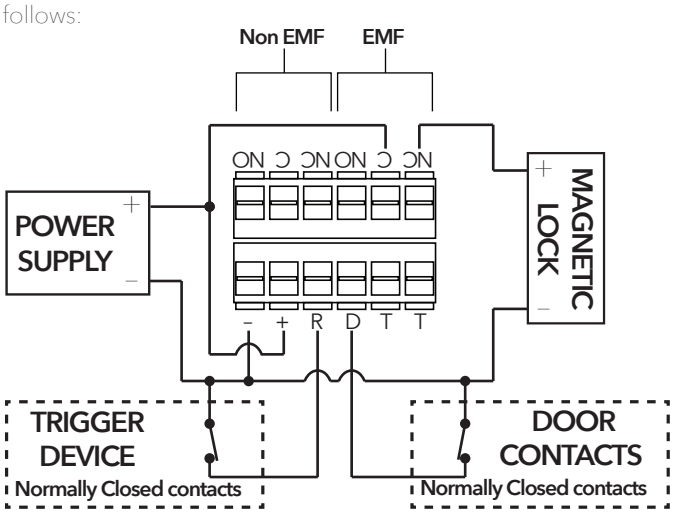

In an installation requiring disabling of 0E-RXDST by another device such as an intrusion alarm or access control system, the wiring is typically as follows:

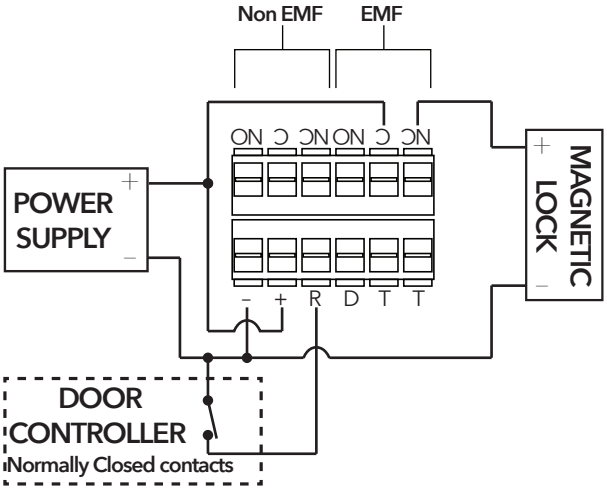

When the contact connected to Terminal R closes, 0E-RXDST is disabled following a 10-second delay, resulting in power disconnecting from the magnetic lock and allowing the door to be opened. This enables compliance with NFPA Life Safety Code requiring a manual release device for secured doors that results in interruption of power to the lock independent of the access control system. Consult with local AHJ and ensure compliance with all local, regional and national codes.

DIP switch settings:

Selectable operational settings for the detector are programmed via the ten (10) DIP switches on the circuit board and accessible with the detector cover removed. Switches are in the on position when the raised part (shown as white below) is in the upward position toward the word "ON," and are in the off position when the raised part is in the downward position toward the switch number. Shown below are switches 1-9 in the ON position and switch 10 in the OFF position:

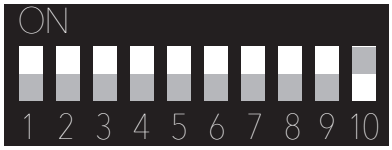

The following operational settings must be selected:

DIP SWITCH 1–LED Enable/LED Disable selection
DIP Switch 3 selects either the LED to light upon detection of motion or remain off. It is recommended not to select disable prior to walk testing the detector as it can provide visual feedback of detector coverage pattern.

LED Enable–switch ON: LED lights upon detection of motion.

LED Disable–switch OFF: LED remains off.

DIP SWITCH 2–Resettable/Non-resettable timer selection
DIP Switch 2 selects either relay reset at the end of latch time ("Resettable") or latch time extention upon additional motion ("Non-Resettable").

Resettable–switch ON: After motion initially activates the relay, each additional detection of motion motion causes the latch timer to restart. Only when there is no longer motion and the latch time is allowed to expire will the relay deactivate. This setting is suitable for bypassing a 24-hour contact.

Non-resettable–switch OFF: After motion initially activates the relay, the relay will deactivate when the latch time ends even if there is additional motion. This setting is suitable for use with access control systems.

DIP SWITCH 3–Fail Safe/Fail Secure relay mode selection
DIP Switch 3 selects either Fail Safe (doors unlocked) or Fail Secure (doors locked) operation in the event of a power failure. Setting selected must comply with all applicable regulations and be verified by local AHJ (Authority Having Jurisdiction).

Fail Safe–switch ON: In the event of a power failure, the relay causes the locking mechanism (such as door strike or magnetic lock) to unlock.

Fail Secure–switch OFF: In the event of a power failure, the relay causes the locking mechanism (such as door strike or magnetic lock) to remain locked. Use this setting only with AHJ approval as life safety can be affected. In addition, ensure there is no interference with functioning of any panic devices associated with the system 0E-RXDST is connected to.

DIP SWITCHES 4, 5 and 6–Latch Time selection
DIP Switch 4, 5 and 6 are used in combination to select the duration of the relay latch time after the relay is ativated by motion detection. Use the following chart to select a latch time from 0.5 second to 64 seconds:

TIME (seconds)	SWITCH 4	SWITCH 5	SWITCH 6
0.5 (default)	OFF	OFF	OFF
1	OFF	OFF	ON
2	OFF	ON	OFF
4	OFF	ON	ON
8	ON	OFF	OFF
16	ON	OFF	ON
32	ON	ON	OFF
64	ON	ON	ON

DIP SWITCH 7–PIR Sensitivity selection
DIP Switch 7 se;lects either normal or low PIR sensitivity.

Normal Sensitivity–switch ON: Normal sensitivity for REX motion detection may be higher than the level for security applications because an unintended trigger does not have the same effect as a false alarm in an intrusion alarm system, and higher sensitivity improves egress response.
Reduced Sensitivity–switch OFF: Reduced sensitivity decreases response but can also decrease unintented triggering.

DIP SWITCHES 8, 9 and 10–Door Security Mode
DIP Switches 8, 9 and 10 are used to select the type of security applied to the operation of the door. Under the wiring instructions the available options for door security are shown with respect to the contact relay wiring that is typically appropriate. These options include the following:

Card Reader Activation–switch 8 does not apply, switch 9 and 10 OFF: Enables input (Terminal R) of a card reader via for access from outside the premises, allowing either the card reader or the REX detector to unlock the door.

Internal Sounder Control–switch 8 does not apply, switch 9 OFF and 10 ON: Enables direct control of the internal sounder via input (Terminal R) of door contacts or other remote contacts. The sounder remains on until the contacts are closed. The relay and relay latch time are not affected, nor is power removed from the lock.

Sequential Triggering–switch 8 does not apply, switch 9 ON and 10 OFF: Enables input (Terminal R) of another device–such as a switch mat, photo beam or PIR–that must be activated first before motion detection by 0E-RXDST can unlock the door. 0E-RXDST can unlock the door while the first trigger device remains activated (Terminal R contact is open) and within 10 seconds of when it deactivates (resets and terminal R contact closes). After the 10 seconds elapse, motion detection by 0E-RXDST cannot unlock the door unless the first trigger device is once again activated prior to the motion detection. Sequential Triggering provides higher security against attempts to trick 0E-RXDST into unlocking the door by simulating motion that would trigger the PIR (such as slipping objects under or between doors). This cannot be successful if triggering of another device is required first before PIR activation will unlock the door, assuming the other device is protected from false activation.

Door Contact Monitoring Configuration 1–switch 8 OFF, switch 9 and 10 ON: Enables activation of the internal sounder (via door contacts connected to Terminal D) if the relay timer is in the last 10 seconds of latch time (latch time must be set to 16 seconds or more via DIP switches 4, 5 and 6–see DIP Switch Settings) and the door is held or propped open. The sounder will also activate if the door is opened prior to motion detection. In either circumstance, the sounder will remain on until either the door closes or motion is detected.

Door Contact Monitoring Configuration 2–switch 8, 9 and 10 ON: Enables triggering the internal relay to drop out (via input of door contacts connected to Terminal D) after 10 seconds if the detector is triggered by motion but the door is not opened, or after 2 seconds if the detector is triggered by motion and the door is opened and then closed. This is designed to prevent tailgating and other unauthorized entry. The detector can be triggered by motion or another trigger device such as a switch mat, photo beam or PIR (similar to first trigger devices for Sequential Triggering) if Terminal R is used (DIP switch 2 must be ON–Resettable Mode).

REX Detector Disable–switch 8 does not apply, switch 9 ON and 10 OFF: Enables (via contacts connected to Terminal R) disabling of 0E-RXDST by another device such as an intrusion alarm or access control system. When the contact connected to Terminal R closes, 0E-RXDST is disabled following a 10-second delay, resulting in power disconnecting from the magnetic lock and allowing the door to be opened. This enables compliance with NFPA Life Safety Code requiring a manual release device for secured doors that results in interruption of power to the lock independent of the access control system. Consult with local AHJ and ensure compliance with all local, regional and national codes.

Installation:

Remove the cover of the detector by inserting a flat head screwdriver into the slot visible (at the extreme end opposite the end with the PIR lens) on the back of the detector and prying it off. Follow instructions for wiring and DIP switch settings.

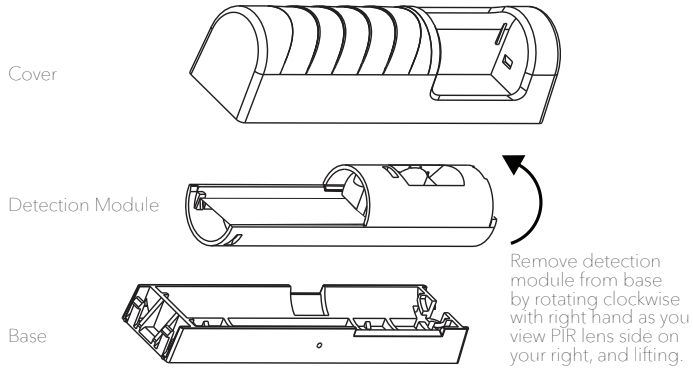

Route wires through the wiring entrances on the left side of the detector. For surface wiring, carefully cut out the breakaway notch provided on the cover at the same end as the wire entrances appear on the base.

The detector can be mounted from 7 ft to 15 ft. (2.1m to 4.6m) above the floor. Mounting height affects the detection pattern, generally expanding it as the height increases.

Mount the base to the mounting surface using mounting screws supplied. **The word "DOOR" on the base must be right side up (and arrows pointing down toward door) for correct mounting.**

Re-insert the detection module into the base (turning counter-clockwise, opposite of removal shown above). Aim the detector for coverage desired. Tighten detector module lock screw to prevent movement of the detector module and disruption of coverage pattern due to vibration, etc.

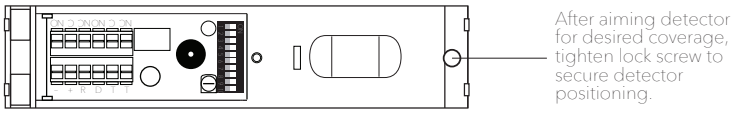

To mask the PIR detection pattern, insert masking wedges using small holes at top and bottom of PIR lens on outside surface of detector. Masking can reduce unintended activation by persons not intending egress.

After verifying detection coverage pattern by walk test, make sure all wiring and DIP switch settings are correct and that detection module aim is locked. Replace cover and press firmly to snap in place.

Optional trim plate:

0E-RXDST is not tall enough to cover a single gang box. For a neat, attractive installation, mount the detector using the optional trimplate (0E-TP):

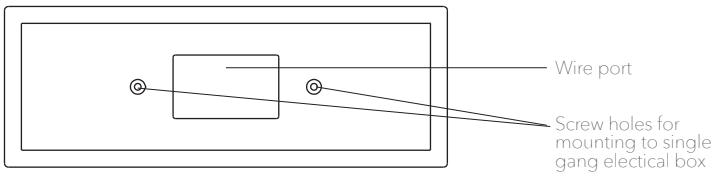

Route wires through trim plate, into channels on back of detector base and through wiring channels on left side. When mounting detector base as described above, after inserting screws through holes in detector base, pass them through trim plate holes and into mounting holes on installed single gang box. Tighten screws.

Detection coverage pattern:

The ideal installation of 0E-RXDST provides responsiveness to the motion of persons attempting to exit while minimizing unintended triggering of the detector. Persons moving at a normal pace toward the door(s) to exit should be able to push the door open without waiting for the door to unlock. Persons in areas not close to the door and not moving toward the door to exit should generally not cause the door to unlock by triggering the detector. In addition to advanced feature settings and configurations such as PIR Sensitivity and Door Security Mode, achieving the proper balance of ensuring responsiveness while minimizing unintended triggering is mostly a function of the following factors affecting the coverage pattern:

- Choice of wall (including door frame) or ceiling mount
- Mounting height
- Aiming of the detector (vertical only)
- Masking of the PIR lens (see "Installation" on previous page)

In general, the further from the floor the detector is located, the larger the detection pattern becomes. The higher the detector is aimed, the further the pattern extends (when wall mounted) though detection range is limited to about 20 feet (about 6 meters) maximum. Aiming the detector lower to bring the coverage pattern closer to the door can help eliminate triggering from persons moving in the vicinity of the door without intending to exit. When selecting Non-resettable latch time (DIP switch 2 OFF), adjust latch time (DIP switches 4,5 and 6) to allow persons intending to exit to reach the door in time after triggering the detector.

The Fresnel lens of the PIR detector is segmented to provide six (6) dual detection zones. The body heat (IR energy) of a person moving through a zone triggers the detector. When wall mounted at a height of 7' with the detector aimed downward by 14° 0E-RXDST, produces approximately the follwing coverage pattern on the floor as seen from above:

Top view of coverage pattern on the floor at 7' wall mount height with -14° aim

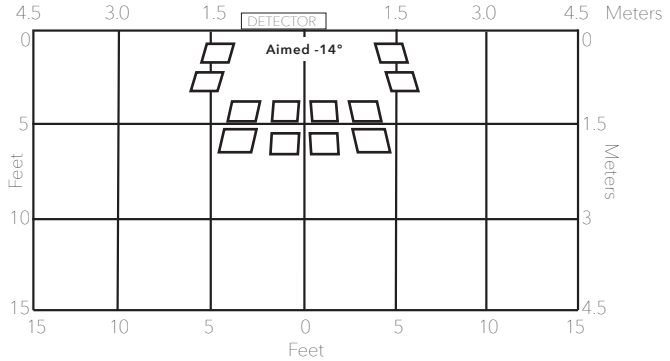

When wall mounted at a height of 15' with the detector aimed upward by 14° 0E-RXDST, produces approximately the following expanded coverage pattern on the floor as seen from above:

Top view of coverage pattern on the floor at 15' wall mount height with +14° aim

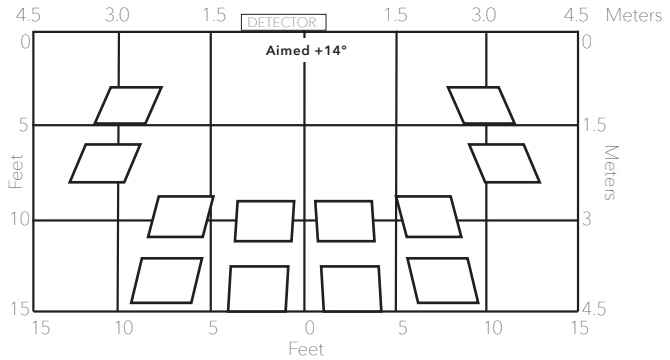

Aiming the detector lower brings coverage closer to the door, possibly reducing unintended triggering of the detector. When wall mounted at a height of 7′ with the detector aimed downward by 14°, 0E-RXDST produces approximately the following coverage pattern on the floor as seen from above:

Top view of coverage pattern on the floor at 7′ wall mount height with -14° aim

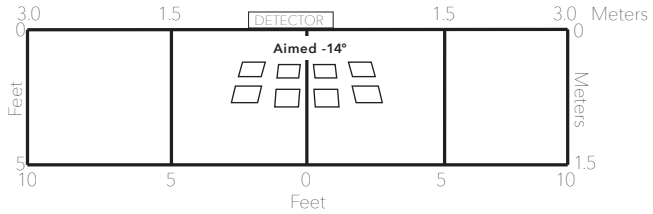

When wall mounted at a height of 15′ with the detector aimed downward by 14°, 0E-RXDST, produces approximately the following expanded coverage pattern on the floor as seen from above:

Top view of coverage pattern on the floor at 15′ wall mount height with -14° aim

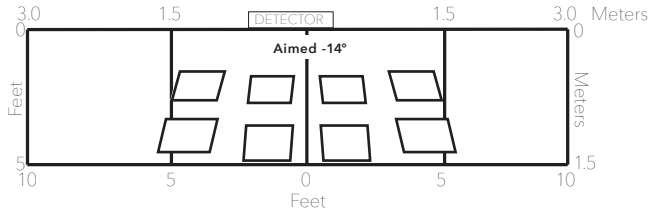

Viewed from the side, the coverage range is approximately as follows:

Side view of coverage range with -14° aim

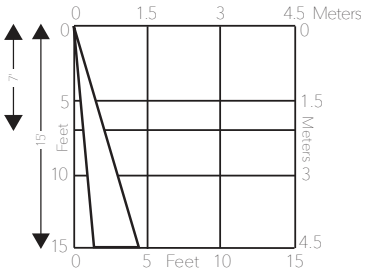

Side view of coverage range with +14° aim

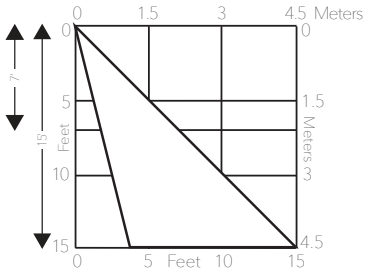

To provide responsive egress for double doors, mount one 0E-RXDST above the center of each door and wire the outputs so that detection of motion by either detector will unlock the doors. In most cases, masking the inside zones on both detectors will not affect responsiveness yet may reduce the possibility of triggering from insertion of an object between the two doors.

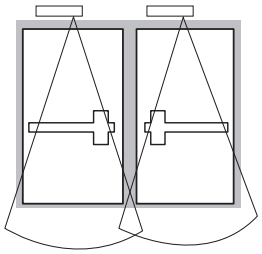

The gap between double doors without a center post may allow intruders to trigger the motion detector by inserting a hot or cold object into the detection pattern. An alternative mounting option should be chosen to avoid this possibility, such as ceiling mounting away from the door.

Installation testing:

All wiring connections should be made and verified before any power is connected to the detector. All power, including standby battery if used, should be disconnected.

Do not replace detector cover before the following have been completed:

- All wiring connections have been made and verified
- Detector has been properly mounted
- A walk test has been conducted to confirm coverage and proper functioning of the system

Apply power to the unit after determining all wiring connections have been properly made and that no hazards exist. The detector's green LED will initially flash on and off unless it has been disabled (DIP switch 1 set to OFF position). The LED should be enabled (DIP switch 1 set to ON position) to conduct a proper walk test and can be disabled afterward if required prior to replacing detector cover.

Allow the detector to stabilize for five (5) minutes. Conduct a walk test by approaching the door from all angles that persons can normally be expected to approach from and verify responsiveness. Adjust the detector aim up or down as necessary to optimize the detection pattern. Also verify that traffic not intending to exit does not typically trigger the detector. If necessary, adust the detector aim. Mask the PIR lens if necessary.

Be sure to tighten the lock screw for the detector aim after detection coverage has been finalized.

Ensure that latch duration allows enough time to reach the door after detection and adjust if necessary.

Verify Fail-Safe or Fail-Secure operation by temporarily disconnecting power to the unit and determining that door is unlocked (Fail-Safe) or locked (Fail-Secure). Reset DIP switch 3 if necessary and repeat test. Setting selected must comply with all applicable regulations and be verified by local AHJ (Authority Having Jurisdiction).

After confirming the detector is operating as required (including leaving LED enabled or disabling it following final walk test), replace the cover and perform one final walk test to ensure proper operation.

The detector should be tested at least once a year to ensure proper operation of all functions.

Important Note:

0E-RXDST is designed for installation by properly trained, experienced and qualified technicians only. It should be installed in compliance with all applicable local, regional and national electrical and safety codes.

Performance Level

0E-RXDST meets the following performance levels for Access Control (UL294 6th Edition):

Feature	Level
Destructive Attack	I
Line Security	I
Endurance	IV
Standby Power	I

Current Ratings

The following are the maximum current ratings for each input voltage:

Input Voltage	Max. Current
12VDC	16mA
12VAC	52mA
24VDC	20mA
24VAC	64mA

Install in accordance with National Electric Code (NEC 70) and the applicable National Fire Protection Association (NFPA) Installation Standards, local codes and the local Authority Having Jurisdiction (AHJ).

All Circuits Class 2. Units shall be connected to a UL 294 or 603 power limited class 2 output power supply.

ACCESS CONTROL

UL LISTED

UL 294 LISTED
ACCESS CONTROL SYSTEM UNITS
Edition 6

ADI PRO

Questions? Please contact us at ADIPRO@adiglobal.com