# YC-850

INTERFACE UNIT BRACKET

The YC-850 Wall mounting bracket is designed to mount the N-8000 Series Interface units to a wall.

## Key features

- Designed to mount N-8000RS, N-8010RS, N-8400RS, N-8000DI, N-8000AF, N-8000AL and N-8000CO on a wall

## Specifications

| | |
|---|---|
| Finish | Surface-treated steel plate, black, 30 % gloss |
| Dimensions | 45.1 (W) x 220 (H) x 10 (D) mm (1.78 x 0.39" x 8.66") |
| Weight | 180 g (0.4 lb) |
| Included Accessories | Unit mounting screw ……4, Screw for wall mounting (wood screw)…4 |
| Use with | N-8000RS, N-8000DI, N-8000AF, N-8000CO, N-8000AL,<br>N-8010RS, N-8400RS |

## Dimensions

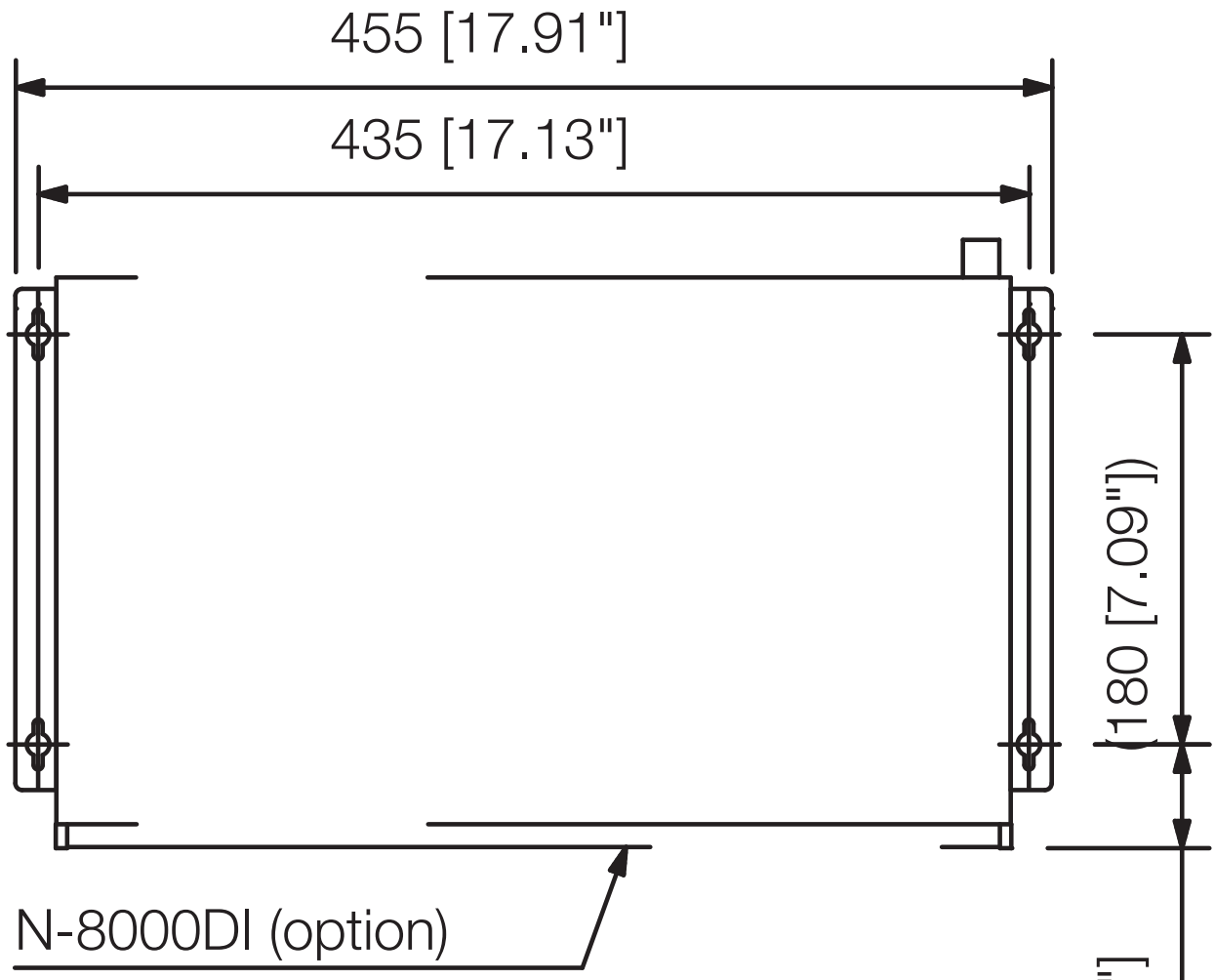
455 [17.91"]
435 [17.13"]
180 [7.09"]
45.5 [1.79"]
N-8000DI (option)

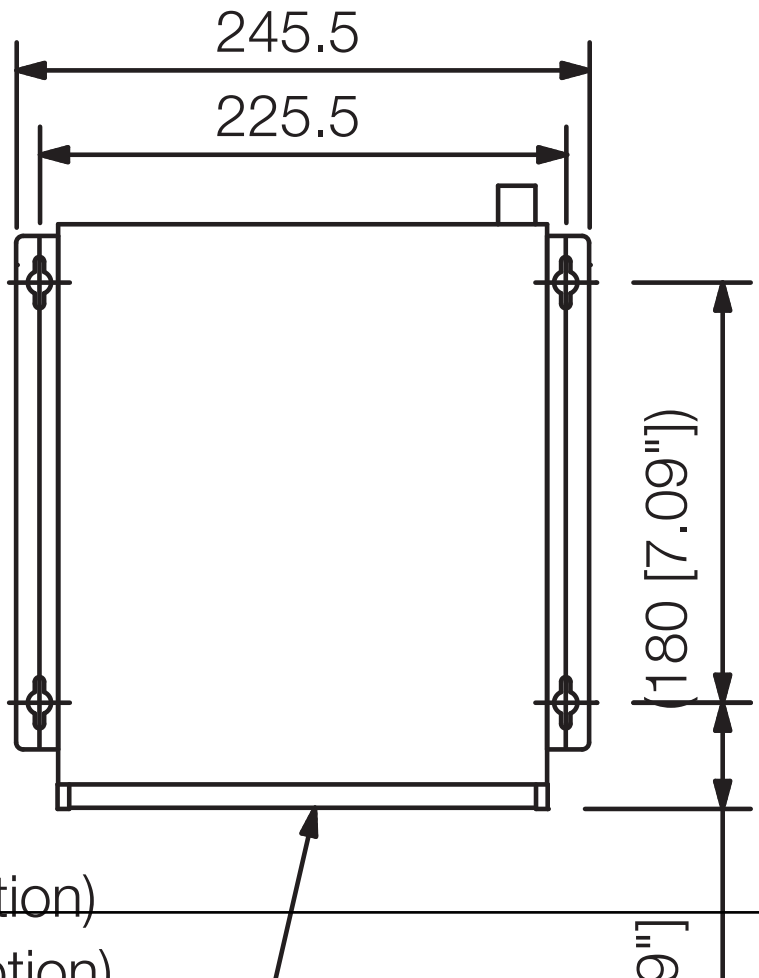
245.5
225.5
180 [7.09"]
N-8000AF (option)
N-8000CO (option)

## Dimensions

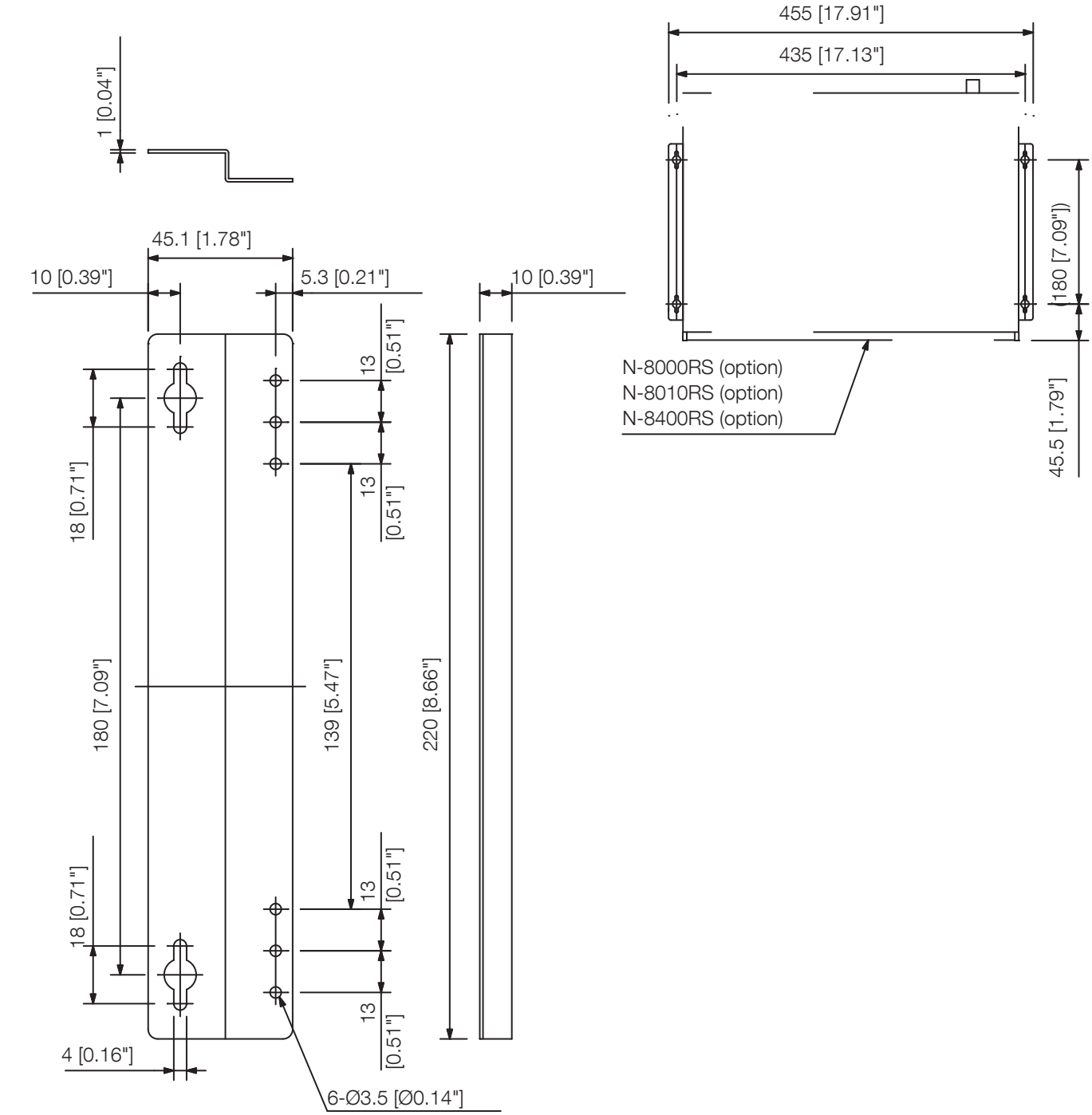


UNIT:mm SCALE:1/2