TOA

CENTRAL UNIT

TS-820
(1CE/3CU/4CE/-CN)

■DESCRIPTION

The TS-820 is a Central Unit of the Infrared Conference System that allows easy installation and flexible layout. By connecting TS-905/907 IR Transmitter/Receiver, TS-820 can control the Chairman and Delegate Units via wireless infrared signal. It features the installation confirmation function that allows the connection status of IR Transmitter/Receiver and Chairman/Delegate Units to be verified. The TS-820 is also equipped with FBS (Feedback Suppression), enabling effective control of acoustic feedback. The system can be controlled by PC (*1). With the use of an optional rack mounting bracket, it can be mounted in an EIA Standard equipment rack (4 unit size).

(*1) Relevant control software is supplied on a custom-made basis.

■SPECIFICATIONS

Power Source	100 – 240 V AC, 50/60 Hz (use of the supplied AC adapter)
Power Consumption	72 W
Current Consumption	Max. 3 A DC (when 24 V DC is supplied from the accessory AC adapter)
Carrier Frequency	Reception: Audio channel 1: 7.35 MHz Audio channel 2: 8.10 MHz Audio channel 3: 8.55 MHz Audio channel 4: 9.15 MHz Control channel: 6.45 MHz Transmission: Audio channel: 1.95 MHz
Input	MIC: −60 dB (*2) , 600 Ω, unbalanced, ø6.3 mm phone jack (2P) AUX: −20 dB (*2) , 10 kΩ, unbalanced, ø6.3 mm phone jack (2P)
Output	LINE: −10 dB (*2), 10 kΩ, unbalanced, ø6.3 mm phone jack (2P) REC: −10 dB (*2), 10 kΩ, unbalanced, RCA pin jack HEADPHONES: ø3.5 mm mini jack (3P: monaural)
Equalizer Input/Output	Input: −20 dB (*2), 10 kΩ, unbalanced, RCA pin jack Output: −20 dB (*2), 10 kΩ, unbalanced, RCA pin jack
Number of Connectable Chairman/Delegate Units	64 units
Number of Connectable Infrared Transmitter/Receiver Units	Up to 4 units (with the use of distributor, up to 16 units connectable when they are all TS-905, and up to 12 units when they are all TS-907, or TS-905 and TS-907 are used in combination)
Infrared Transmitter/Receiver I/O Terminal	BNC jacks
External Control Connection Terminal	D-sub connector (9P, male)/USB-B selectable
LED Indicator	Audio signal receiving indicators 1 – 4 CH, Data signal receiving indicator, External control priority indicator, External control communication indicator, Battery indicator (flashes when a Chairman/Delegate unit's battery nears complete discharge), Short-circuit indicator
Function Switch	Number of open microphones setting switch: 1/2/3/4 Mic-off setting switch: TIME OUT ON/OFF Speech priority selector switch: FIRST (First-in-first-out priority) LATEST (Last-in-first-out priority) FIRST: FIXED NEXT: LATEST (Priority fixed for the first unit, and last-in-first-out priority for all other subsequent units.) FBS switch: AUTO/OFF/EXT
Operating Temperature	0 °C to +40 °C (32 °F to 104 °F)
Operating Humidity	90 %RH or less (no condensation)
Finish	Panel: Surface-treated steel plate, black, 30 % gloss, paint
Weight	2.7 kg (5.95 lb)
Accessory	AC adapter (Cord length: 1.8 m (5.91 ft) DC cord, and 2 m (6.56 ft) detachable AC cord)(*3) ···1
Option	Rack mounting bracket: MB-TS920

(*2) 0 dB = 1 V
(*3) Not supplied with the TS-820(-CN). For the usable power supply cord and AC adapter, contact your nearest TOA dealer.

TOA

CENTRAL UNIT

TS-820
(1CE/3CU/4CE/-CN)

■APPEARANCE

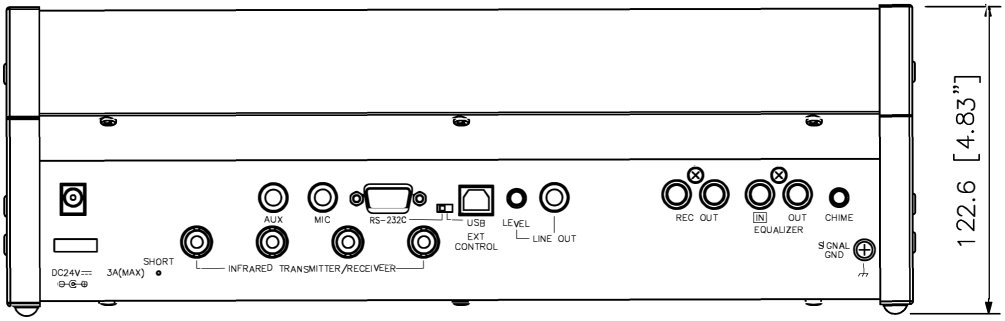

Figure as viewed from point A

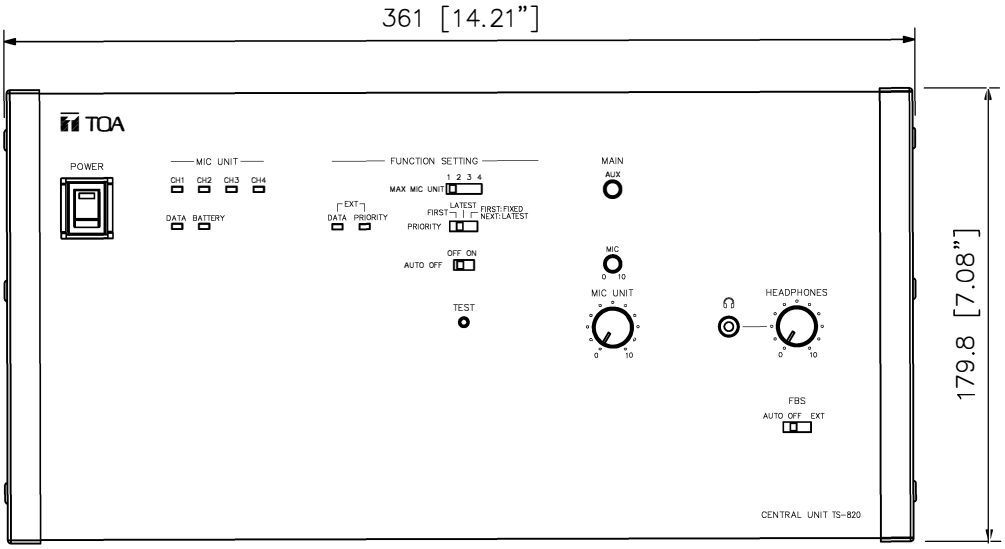

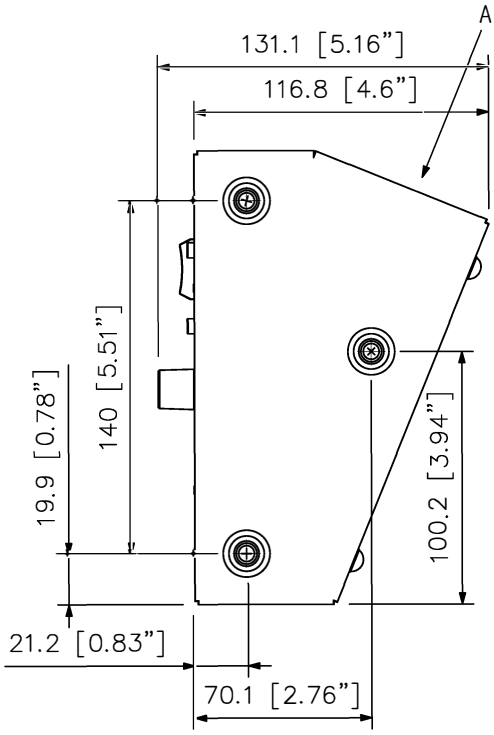

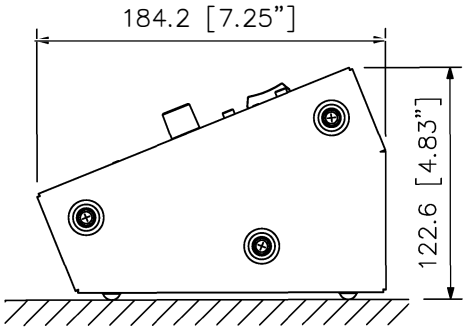

Figure of the unit installed
(scale: 1/4)

UNIT:mm SCALE:1/3

TOA Canada Corporation

DWG No: GTS01RC1